www.yeonhab.co.kr webmaster@yeonhab.co.kr

YH series

Special Style Connector
ISO 9001 / ISO14001

Rev No. 1

연합정밀주식회사
YEONHAB PRECISION CO., LTD.

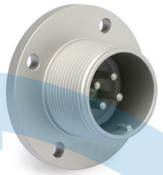

MIL-C-22992 Class "C", "R" Style	주문정보 및 부품번호 구분 (Ordering Information and Part Number Information)	5
	전기적 특성 (Electrical Data)	6
	재질 및 보호피막 (Material and Protection Coating)	6
	패널 Mounting (Panel Mounting)	6
	Connector, Receptacle, Electrical, Wall mounting (YH17343)	7
	Connector, plug, Electrical, straight (YH17344)	7
	Connector, Plug, Electrical, Cable Connecting, Female (YH17345)	8
	Connector, Receptacle, Electrical, box mounting (YH17346)	8
	Connector, Receptacle, Electrical, Jam nut (YH17347)	9
	Connector, Receptacle, Electrical, Jam nut(box) (YH17348)	9
	Cover, Protective, Electrical, Connector, Receptacle (YH17349)	10
	Cover, Protective, Connector, Plug (YH17350)	11
	Cover, Protective, Connector, Plug (YH18062)	12
	MIL-C-22992 Style 접점 배열도 (Contact Arrangements)	13
	MIL-C-22992 Style 배열에 따른 접점구성 (Contact Arrangements and Formation)	20
	MIL-C-22992 Style 절연체 회전위치 (Alternate Insert Positions)	21
YGC Series (GAS Sealing Connector)	개요 (Overview)	23
	전기적 특성 및 기밀성 (Electrical Data and Pressure Seal)	23
	재질 및 보호피막 (Material and Protection Coating)	23
	주문정보 및 부품번호 구성 (Ordering Information and Part Number Information)	23
	원형 코넥터, 패널 장착형 "00" (Round connector, Panel mounting type "00")	24
	잼 너트형 코넥터, 패널 장착형 "04" (Jam Nut connector, Panel mounting type "04")	26
	원형 코넥터, 패널 장착형 "01" (Round connector, Panel mounting type "01")	27
	원형 코넥터, 패널 장착형 "02" (Round connector, Panel mounting type "02")	28
	Contact	29
Audio Connector	개요 (Overview)	30
	5&6-Contact — Materials & Finish, Specifications	30
	10-Contact — Materials & Finish, Specifications	31
	7-Contact Miniature Connector — Materials & Finish, Specifications	31
	5-Contact Standard per MIL-C-55116 — YH-183/U Receptacle	32
	YH-228/U Plug	32
	YH-229/U Plug	32
	6-Contact Standard per MIL-C-55116 — YH-283/U Receptacle	33
	YH-328/U Plug	33
	YH U-329/U Plug	33

Audio Connector	10-Contact per MIL-C-10544 Style	YH U-77/U Receptacle	34
		YH U-78/U Receptacle	34
		YH U-161/U Plug	34
		YH U-79/U Plug	34
	7-Contact Miniature Connector	YH 95351-C7 Receptacle	35
		YH 95351-A7 Plug	35
U-Type Multipurpose Connector	개요 (Overview)		36
	YH U-288/U Receptacle		37
	YH U-290/U Plug		37
	YH U-291/U Receptacle		38
	YH U-289/U Plug		38
	YH U-393/U 90˚ Angle Plug		38
	YH U-318/U Receptacle		39
	YH U-316/U Plug		39
	YH U-317/U Shorting Plug		39
MW Connector (MIL-C-55181 Style)	개요 (Overview)		40
	Materials & Finish		40
	Specifications		40
	MW 10 Plug		41
	MW 20 Peceptacle		41
Audio Filtered Connector (MIL-C-55116 Style Type)	개요 (Overview)		42
	5&6-Contact Materials & Finish, Specifications		42
	YH183L-1 (5 Contacts)		43
	YH283L-1 (6 Contacts)		43
Connector for Electronic Vehicle	주문정보 (Ordering Information (Military Nomenclature)		44
	전기적 특성 (Electrical Data)		44
	환경 특성 (Environmental Data)		45
	Material and Colour		45
	Connector, Plug, Straight Electrical (EV06 : Straight Plug)		46
	Connector, Receptacle, Wall mounting, Electrical (EV02 : Wall mounting Receptacle)		46

MIL-C-22992 Class “C”, “R” Style

MIL-C-22992 Class “C”, “R” Style

주문정보 및 부품번호 구분 (Ordering Information)

MS17343 C 20 C 27 P W

- MS Number Shell Style
- Class
- Shell Size
- Finish
- Contact Arrangement
- Contact Style
- Polarizing Position

- **MS Number Shell Style**
  MS17343 - Wall Mounting Receptacle
  MS17344 - Straight Plug
  MS17345 - Cable Connecting Plug
  MS17346 - Box mounting Receptacle
  MS17437 - Jam nut Receptacle
  MS17348 - Jam nut Receptacle(Box)
- **Class**
  C - Pressurized
  R - Environment resisting
- **Shell Size**
  12, 14, 16, 18, 20, 22, 24, 28, 32, 36
- **Finish**
  C - Conductive (전도성)
  Olive drab cadmium plate over nickel.
  N - Non Conductive (비전도성)
  Hard black anodize.
- **Contact Arrangement**
  MIL-STD-1651A에 따른다. (Follows MIL-STD-1651A.)
- **Contact Style**
  P - Pin
  S - Socket
- **Polarizing Position**
  MIL-STD-1651A에 따른다.(W, X, Y, Z)

YH 17343 C 20 C 27 P W

- YH Number Shell Style
- Class
- Shell Size
- Finish
- Contact Arrangement
- Contact Style
- Polarizing Position

- **YH Number Shell Style**
  YH17343 - Wall Mounting Receptacle
  YH17344 - Straight Plug
  YH17345 - Cable Connecting Plug
  YH17346 - Box mounting Receptacle
  YH17437 - Jam nut Receptacle
  YH17348 - Jam nut Receptacle(Box)
- **Class**
  C - Pressurized
  R - Environment resisting
- **Shell Size**
  12, 14, 16, 18, 20, 22, 24, 28, 32, 36
- **Finish**
  C - Conductive (전도성)
  Olive drab cadmium plate over nickel.
  N - Non Conductive (비전도성)
  Hard black anodize.
- **Contact Arrangement**
  MIL-STD-1651A에 따른다. (Follows MIL-STD-1651A.)
- **Contact Style**
  P - Pin
  S - Socket
- **Polarizing Position**
  MIL-STD-1651A에 따른다.[W, X, Y, Z] (Follows MIL-STD-1651A.)

전기적 특성 (Electrical Data)

Altitude Voltage Derating

Service Rating	Nominal Distance		Standard Sea Level Conditions		Pressure Altitude 50,000 feet		Pressure Altitude 70,000 feet	
	Airspace	Creepage	Minimum Flashover Voltage AC(RMS)	Test Voltage AC(RMS)	Minimum Flashover Voltage AC(RMS)	Test Voltage AC(RMS)	Minimum Flashover Voltage AC(RMS)	Test Voltage AC(RMS)
Inst.	1/32	1/16	1400	1000	550	400	325	260
A	1/16	1/8	2800	2000	800	600	450	360
D	1/8	3/16	3600	2800	900	675	500	400
E	3/16	1/4	4500	3500	1000	750	550	440
B	1/4	5/16	5700	4500	1100	825	600	480
C	5/16	1	8500	7000	1300	975	700	560

절연저항 : DC500V에서 5000MΩ 이상일 것(at 25℃) Insulation resistance : It must be above 5000MΩ at DC500V (at 25℃)

접점배열에 따른 서비스 등급

Service Rating	Recommended Operating Voltage at Sea Level		Effective Creepage Distance (Normal)	Mechanical Spacing (Normal)
	DC	AC(RMS)		
Inst.	250	200	1/16	
A	700	500	1/8	1/16
D	1250	900	3/16	1/8
E	1750	1250	1/4	3/16
B	2450	1750	5/16	1/4
C	4200	3000	1	5/16

재질 및 보호피막 (Standard Materials and Finishes)

Shell	Aluminum alloy
	"C" - Conductive, Olive drab cadmium over nickel.
	"N" - Non Conductive, Hard black anodize.
Insulator	CR
Contacts	Copper alloy / Silver plate

PANEL Mounting

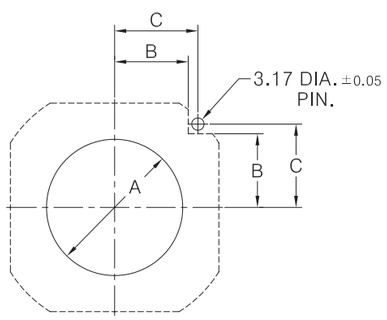

Shell size	A Dia +0.13 -0.00	B ±0.08	C ±0.13
12	25.53	14.27	17.47
14	28.70	15.39	19.05
16	31.88	17.75	22.22
18	35.05	18.77	23.82
20	38.23	19.89	25.40
22	41.40	21.08	26.97
24	47.75	23.34	30.17
28	54.10	25.58	33.32
32	60.45	27.84	36.52
36	66.80	30.05	39.67

MIL-C-22992 Class "C", "R" Style

Connector, Receptacle, Electrical, Wall mounting

YH17343(MS17343 Style)

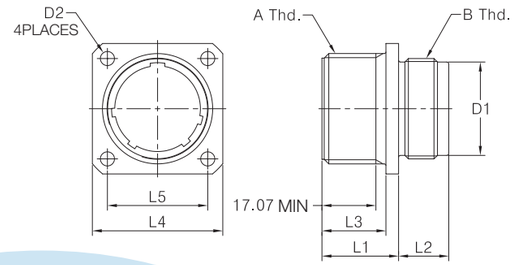

UNIT: mm

Shell size	A Thread. (Class : 2A) DS	B Thread. (Class : 2A) LH	D1 +0.03 -0.18	D2 ±0.13	L1 ±0.13 -0.51	L2 ±0.51	L3 ±0.13 -0.00	L4 ±0.53 -0.51	L5 ±0.10
12	0.8750-0.1P-0.2L	.7500-20UNEF	17.07	3.81	23.83	16.26	20.24	30.18	23.01
14	1.0000-0.1P-0.2L	.8750-20UNEF	20.24	3.81	23.83	16.26	20.24	32.54	24.61
16	1.1250-0.1P-0.2L	1.0000-20UNEF	23.42	3.81	23.83	16.26	20.24	34.93	26.97
18	1.2500-0.1P-0.2L	1.1250-18UNEF	26.42	4.50	23.83	15.88	20.24	38.10	29.36
20	1.3750-0.1P-0.2L	1.2500-18UNEF	29.57	4.50	23.83	15.88	20.24	41.28	31.75
22	1.5000-0.1P-0.2L	1.3750-18UNEF	32.74	4.50	23.83	15.88	20.24	44.45	34.93
24	1.7500-0.1P-0.2L	1.6250-18UNEF	39.09	4.50	26.59	15.09	21.82	50.80	39.67
28	2.0000-0.1P-0.2L	1.8750-16UN	45.21	4.50	26.59	15.09	21.82	57.15	44.45
32	2.2500-0.1P-0.2L	2.0625-16UNS	49.96	5.31	28.22	13.46	23.42	63.50	49.23
36	2.5000-0.1P-0.2L	2.3125-16UNS	56.31	5.31	28.22	13.46	23.42	69.85	55.58

Connector, plug, Electrical, straight

YH17344(MS17344 Style)

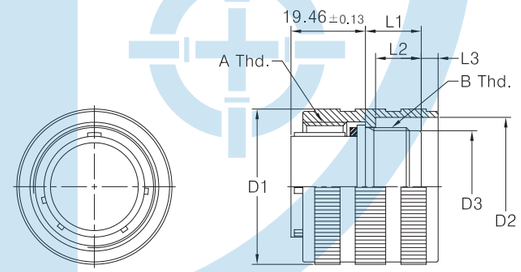

UNIT: mm

Shell size	A Thread. (Class : 2A) DS	B Thread. (Class : 2A) LH	D1 MAX.	D2 ±0.25 -0.03	D3 ±0.03 -0.18	L1 ±0.28 -0.25	L2 ±0.79	L3 MAX.
12	0.8750-0.1P-0.2L	.7500-20UNEF	29.36	25.02	17.07	18.75	13.44	2.54
14	1.0000-0.1P-0.2L	.8750-20UNEF	32.54	28.17	20.24	18.75	13.44	2.54
16	1.1250-0.1P-0.2L	1.0000-20UNEF	37.32	31.37	23.42	18.75	13.44	3.81
18	1.2500-0.1P-0.2L	1.1250-18UNEF	39.70	34.52	26.42	18.75	13.44	6.99
20	1.3750-0.1P-0.2L	1.2500-18UNEF	42.88	37.72	29.57	18.75	13.44	6.99
22	1.5000-0.1P-0.2L	1.3750-18UNEF	46.84	40.87	32.74	18.75	13.44	6.99
24	1.7500-0.1P-0.2L	1.6250-18UNEF	53.19	47.22	39.09	20.32	13.44	6.99
28	2.0000-0.1P-0.2L	1.8750-16UN	59.54	53.57	45.21	20.32	13.44	6.99
32	2.2500-0.1P-0.2L	2.0625-16UNS	65.89	59.92	49.96	22.23	13.44	6.99
36	2.5000-0.1P-0.2L	2.3125-16UNS	72.24	66.27	56.31	22.23	13.44	7.62

Connector, Plug, Electrical, Cable Connecting, Female

YH17345(MS17345 Style)

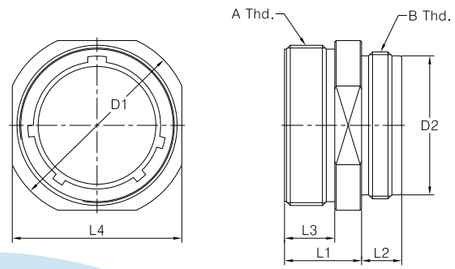

UNIT: mm

Shell size	A Thread. (Class : 2A) DS	B Thread. (Class : 2A) LH	D1	D2 ±0.03 -0.18	L1 ±0.53 -0.51	L2 ±0.25	L3 ±0.41 -0.00	L4 ±0.53 -0.51
12	0.8750-0.1P-0.2L	.7500-20UNEF	31.75	17.07	23.83	16.28	17.48	25.40
14	1.0000-0.1P-0.2L	.8750-20UNEF	34.93	20.24	23.83	16.28	17.48	27.79
16	1.1250-0.1P-0.2L	1.0000-20UNEF	38.10	23.42	23.83	16.28	17.48	32.54
18	1.2500-0.1P-0.2L	1.1250-18UNEF	41.28	26.42	24.21	15.88	17.86	34.93
20	1.3750-0.1P-0.2L	1.2500-18UNEF	44.45	29.57	24.21	15.88	17.86	38.10
22	1.5000-0.1P-0.2L	1.3750-18UNEF	47.63	32.74	24.21	15.88	17.86	41.28
24	1.7500-0.1P-0.2L	1.6250-18UNEF	53.98	39.09	24.82	15.88	19.46	47.63
28	2.0000-0.1P-0.2L	1.8750-16UN	60.20	45.21	25.81	15.88	19.46	53.98
32	2.2500-0.1P-0.2L	2.0625-16UNS	66.68	49.96	27.38	14.30	17.86	60.33
36	2.5000-0.1P-0.2L	2.3125-16UNS	73.03	56.31	27.38	14.30	17.86	66.68

Connector, Receptacle, Electrical, box mounting

YH17346(MS17346 Style)

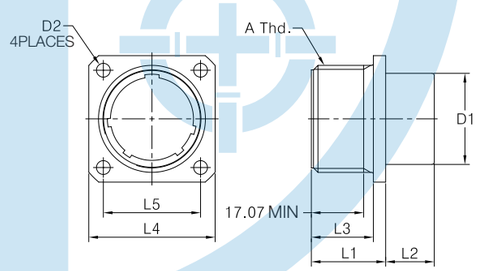

UNIT: mm

Shell size	A Thread. (Class : 2A) DS	D1 +0.03 -0.18	D2 ±0.13	L1 ±0.13 -0.51	L2 ±0.51 -0.76	L3 ±0.13 -0.00	L4 ±0.53 -0.51	L5 ±0.10
12	0.8750-0.1P-0.2L	17.07	3.81	23.83	16.26	20.24	30.18	23.01
14	1.0000-0.1P-0.2L	20.24	3.81	23.83	16.26	20.24	32.54	24.61
16	1.1250-0.1P-0.2L	23.42	3.81	23.83	16.26	20.24	34.93	26.97
18	1.2500-0.1P-0.2L	26.42	4.50	23.83	15.88	20.24	38.10	29.36
20	1.3750-0.1P-0.2L	29.57	4.50	23.83	15.88	20.24	41.28	31.75
22	1.5000-0.1P-0.2L	32.74	4.50	23.83	15.88	20.24	44.45	34.93
24	1.7500-0.1P-0.2L	39.09	4.50	26.59	15.09	21.82	50.80	39.67
28	2.0000-0.1P-0.2L	45.21	4.50	26.59	15.09	21.82	57.15	44.45
32	2.2500-0.1P-0.2L	49.96	5.31	28.19	13.49	23.42	63.50	49.23
36	2.5000-0.1P-0.2L	56.31	5.31	28.19	13.49	23.42	69.85	55.58

Connector, Receptacle, Electrical, Jam nut

YH17347(MS17347 Style)

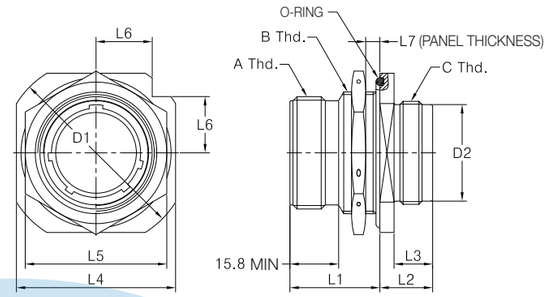

UNIT: mm

Shell size	A Thread. (Class : 2A) DS	B Thread. (Class : 2A)	C Thread. (Class : 2A) LH	D1	D2 +0.03 -0.18	L1 ±0.25	L2 +0.53 -0.51	L3	L4	L5 +0.43 -0.41	L6 +0.28 -0.25	L7 (PANEL THICKNESS) MIN.	MAX.
12	0.8750-0.1P-0.2L	1.0000-20UNEF	.7500-20UNEF	39.67	17.07	28.98	16.28	13.11	34.93	31.75	12.34	2.39	4.78
14	1.0000-0.1P-0.2L	1.1250-18UNEF	.8750-20UNEF	44.45	20.24	28.98	16.28	13.11	38.10	33.33	13.46	2.39	4.78
16	1.1250-0.1P-0.2L	1.2500-18UNEF	1.0000-20UNEF	50.80	23.42	28.98	17.86	13.11	44.45	38.10	15.82	2.39	4.78
18	1.2500-0.1P-0.2L	1.3750-18UNEF	1.1250-18UNEF	53.98	26.42	29.36	17.86	13.11	47.63	39.68	16.84	2.39	5.16
20	1.3750-0.1P-0.2L	1.5000-18UNEF	1.2500-18UNEF	57.15	29.57	29.36	17.86	13.11	50.80	44.45	17.96	2.39	5.16
22	1.5000-0.1P-0.2L	1.6250-18UNEF	1.3750-18UNEF	63.50	32.74	29.36	17.86	13.11	53.98	47.63	19.08	2.39	5.16
24	1.7500-0.1P-0.2L	1.8750-16UN	1.6250-18UNEF	69.85	39.09	30.96	17.86	13.11	60.33	53.98	21.34	2.39	6.73
28	2.0000-0.1P-0.2L	2.1250-16UN	1.8750-16UN	76.20	45.21	31.27	19.94	13.11	66.68	60.33	23.57	2.39	7.04
32	2.2500-0.1P-0.2L	2.3750-16UN	2.0625-16UNS	82.55	49.96	31.27	19.94	13.11	73.03	66.68	25.83	2.39	5.46
36	2.5000-0.1P-0.2L	2.6250-16UN	2.3125-16UNS	88.90	56.31	31.27	19.94	13.11	79.38	73.03	28.04	2.39	5.46

Connector, Receptacle, Electrical, Jam nut(box)

YH17348(MS17348 Style)

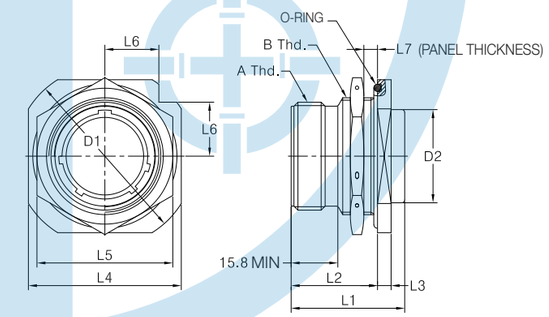

UNIT: mm

Shell size	A Thread. (Class : 2A) DS	B Thread. (Class : 2A)	D1	D2 ±0.03 -0.18	L1 ±0.28 -0.25	L2 ±0.25	L3 ±0.15 -0.13	L4	L5 ±0.43 -0.41	L6 ±0.28 -0.25	L7 (PANEL THICKNESS) MIN.	MAX.
12	0.8750-0.1P-0.2L	1.0000-20UNEF	39.67	17.07	40.08	28.98	3.18	34.93	31.75	12.34	2.39	7.54
14	1.0000-0.1P-0.2L	1.1250-18UNEF	44.45	20.24	40.08	28.98	3.18	38.10	33.33	13.46	2.39	7.54
16	1.1250-0.1P-0.2L	1.2500-18UNEF	23.42	23.42	40.08	28.98	4.78	44.45	38.10	15.82	2.39	7.54
18	1.2500-0.1P-0.2L	1.3750-18UNEF	53.98	26.42	40.08	29.36	4.78	47.63	39.68	16.84	2.39	6.76
20	1.3750-0.1P-0.2L	1.5000-18UNEF	57.15	29.57	40.08	29.36	4.78	50.80	44.45	17.96	2.39	6.76
22	1.5000-0.1P-0.2L	1.6250-18UNEF	63.50	32.74	40.08	29.36	4.78	53.98	47.63	19.08	2.39	6.76
24	1.7500-0.1P-0.2L	1.8750-16UN	69.85	39.09	41.68	30.96	4.78	60.33	53.98	21.34	2.39	8.33
28	2.0000-0.1P-0.2L	2.1250-16UN	76.20	45.21	41.68	31.27	5.56	66.68	60.33	23.57	2.39	8.33
32	2.2500-0.1P-0.2L	2.3750-16UN	82.55	49.96	41.68	31.27	5.56	73.03	66.68	25.83	2.39	8.33
36	2.5000-0.1P-0.2L	2.6250-16UN	88.90	56.31	41.68	31.27	5.56	79.38	73.03	28.04	2.39	8.33

MIL-C-22992 Class “C”, “R” Style

Cover, Protective, Electrical, Connector, Receptacle

YH17349(MS17349 Style)

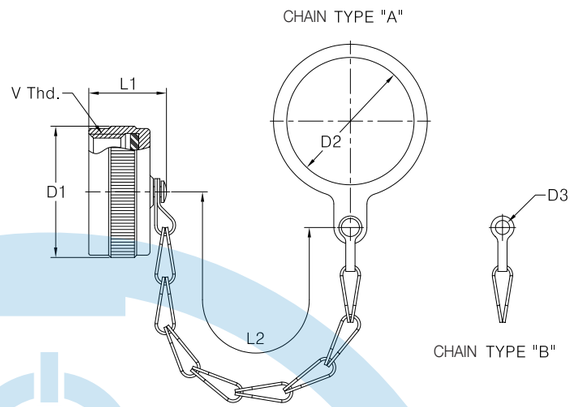

UNIT: mm

Shell size	D1 MAX.	CHAIN Type “A” D2 MIN.	CHAIN Type “B” D3 ±0.03 -0.18	L1 MAX.	L2	V Thread. (Class : 2B) DS
12	27.79	25.81	3.96	19.43	127.0	0.8750-0.1P-0.2L
14	30.96	28.98	3.96	19.43	127.0	1.0000-0.1P-0.2L
16	34.14	32.16	3.96	24.89	127.0	1.1250-0.1P-0.2L
18	37.31	35.33	4.57	24.89	127.0	1.2500-0.1P-0.2L
20	39.67	38.51	4.57	24.89	127.0	1.3750-0.1P-0.2L
22	42.87	41.68	4.57	24.89	152.4	1.5000-0.1P-0.2L
24	49.22	48.03	4.57	24.89	152.4	1.7500-0.1P-0.2L
28	56.36	54.38	4.57	24.89	152.4	2.0000-0.1P-0.2L
32	62.71	60.73	5.31	24.89	152.4	2.2500-0.1P-0.2L
36	69.06	67.08	5.31	24.89	152.4	2.5000-0.1P-0.2L

주문정보 및 부품번호 구분 (Ordering Information)

MS17349 C 28 A

- **MS Number Shell Style**
- **Finish**
  - C - Conductive, Olive drab cadmium over nickel.
  - N - Non Conductive, Hard black anodize.
- **Shell Size**
- **Chain Type (A or B)**

YH17349 C 28 A

- **YH Number Shell Style**
- **Finish**
  - C - Conductive, Olive drab cadmium over nickel.
  - N - Non Conductive, Hard black anodize.
- **Shell Size**
- **Chain Type (A or B)**

MIL-C-22992 Class “C”, “R” Style

Cover, Protective, Connector, Plug

YH17350(MS17350 Style)

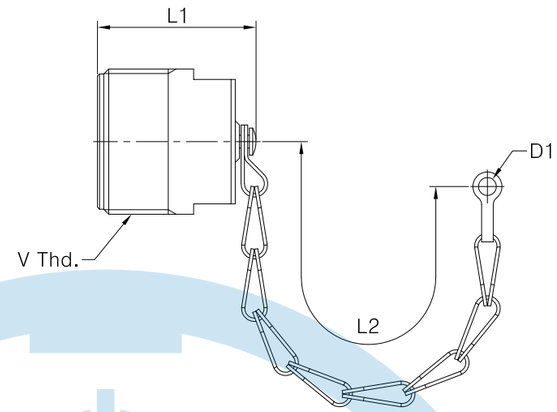

UNIT: mm

Shell size	D1 ±0.25 -0.13	L1 MAX.	L2	V Thread. (Class : 2B) DS
12	3.96	38.1	127.0	0.8750-0.1P-0.2L
14	3.96	38.1	127.0	1.0000-0.1P-0.2L
16	3.96	38.1	127.0	1.1250-0.1P-0.2L
18	4.57	38.1	127.0	1.2500-0.1P-0.2L
20	4.57	38.1	127.0	1.3750-0.1P-0.2L
22	4.57	38.1	152.4	1.5000-0.1P-0.2L
24	4.57	38.1	152.4	1.7500-0.1P-0.2L
28	4.57	38.1	152.4	2.0000-0.1P-0.2L
32	5.31	38.1	152.4	2.2500-0.1P-0.2L
36	5.31	38.1	152.4	2.5000-0.1P-0.2L

주문정보 및 부품번호 구분 (Ordering Information)

MS17350 C 28

- **MS Number Shell Style**
- **Finish**
  - C - Conductive, Olive drab cadmium over nickel.
  - N - Non Conductive, Hard black anodize.
- **Shell Size**

YH17350 C 28

- **YH Number Shell Style**
- **Finish**
  - C - Conductive, Olive drab cadmium over nickel.
  - N - Non Conductive, Hard black anodize.
- **Shell Size**

MIL-C-22992 Class “C”, “R” Style

Cover, Protective, Connector, Plug

YH18062(MS18062 Style)

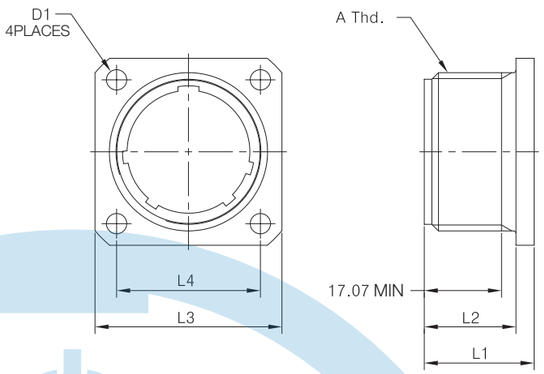

UNIT: mm

Shell size	D1 ±0.13	L1 ±0.53 -0.25	L2 ±0.25 -0.00	L3 ±0.53 -0.51	L4 ±0.10	V Thread. (Class : 2B) DS
12	3.81	23.83	20.24	30.18	23.01	0.8750-0.1P-0.2L
14	3.81	23.83	20.24	32.54	24.61	1.0000-0.1P-0.2L
16	3.81	23.83	20.24	34.93	26.97	1.1250-0.1P-0.2L
18	4.50	24.21	20.24	38.10	29.36	1.2500-0.1P-0.2L
20	4.50	24.21	20.24	41.28	31.75	1.3750-0.1P-0.2L
22	4.50	24.21	20.24	44.45	34.93	1.5000-0.1P-0.2L
24	4.50	26.59	21.82	50.80	39.67	1.7500-0.1P-0.2L
28	4.50	26.59	21.82	57.15	44.45	2.0000-0.1P-0.2L
32	5.31	28.19	23.42	63.50	49.23	2.2500-0.1P-0.2L
36	5.31	28.19	23.42	69.85	55.58	2.5000-0.1P-0.2L

주문정보 및 부품번호 구분 (Ordering Information)

MS18062 C 28

MS Number Shell Style

Finish

C - Conductive, Olive drab cadmium over nickel.
N - Non Conductive, Hard black anodize.

Shell Size

YH 18062 C 28

YH Number Shell Style

Finish

C - Conductive, Olive drab cadmium over nickel.
N - Non Conductive, Hard black anodize.

Shell Size

MIL-C-22992 Style 접점 배열도 (Contact Arrangements)

Shell Size 12

Insert Arrangement	12S-1	12S-3	12S-4	12S-5
Service Rating	A	A	D	D
Number of Contacts	2	2	1	1
Contact Size	16	16	16	12

Shell Size 14

Insert Arrangement	14S-1	14S-2
Service Rating	A	INST
Number of Contacts	3	4
Contact Size	16	16

Shell Size 14

Insert Arrangement	14-3	14S-4	14S-5	14S-6	14S-7	14S-9
Service Rating	A	D	INST	INST	A	A
Number of Contacts	1	1	5	6	3	2
Contact Size	8	16	16	16	16	16

Shell Size 14

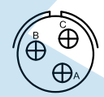

Shell Size 16

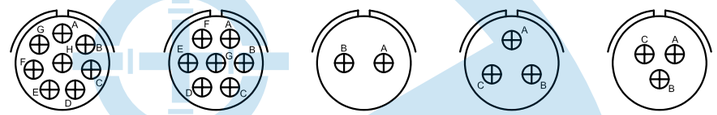

Insert Arrangement	14S-12	16S-01	16S-1	16S-4	16S-5	16S-6
Service Rating	A	A	A	D	A	A
Number of Contacts	3	8	7	2	3	3
Contact Size	16	16	16	16	16	16

Shell Size 16

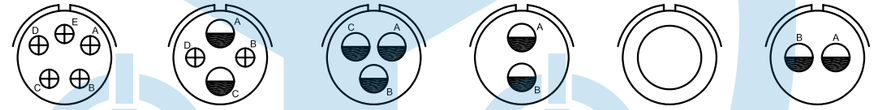

Insert Arrangement	16S-8	16-9	16-10	16-11	16-12	16-13
Service Rating	A	A	A	A	A	A
Number of Contacts	5	2 2	3	2	1	2
Contact Size	16	16 12	12	12	4	12

Shell Size 18

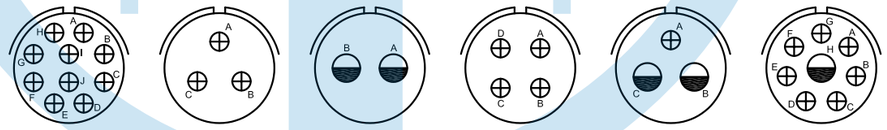

Insert Arrangement	18-1	18-2	18-3	18-4	18-5	18-8
Service Rating	A(B,C,F,G) INST(OTHERS)	24V	D	D	D	A
Number of Contacts	10	3	2	4	1 2	7 1
Contact Size	16	16	12	16	16 12	16 12

Shell Size 18

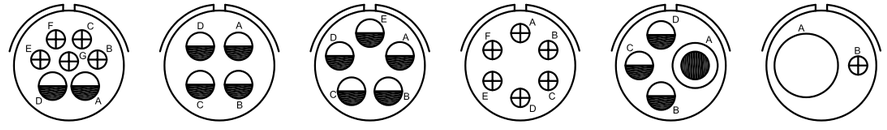

Insert Arrangement	18-9	18-10	18-11	18-12	18-13	18-14
Service Rating	INST	A	A	A	A	A
Number of Contacts	5 2	4	5	6	3 1	1 1
Contact Size	16 12	12	12	16	12 8	16 4

1. View looking into front face of pin insert(+insulator).
2. Please make a direct inquiry for the information not contained in the table.

Contact Legend

MIL-C-22992 Style 접점 배열도 (Contact Arrangements)

Shell Size 18

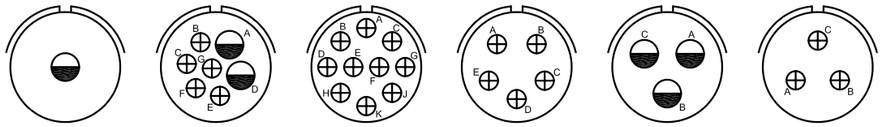

Insert Arrangement	18-16	18-18	18-19	18-20	18-21	18-22
Service Rating	C	INST	A	A	A	D
Number of Contacts	1	5 2	10	5	3	3
Contact Size	12	16 12	16	16	12	16

Shell Size 20

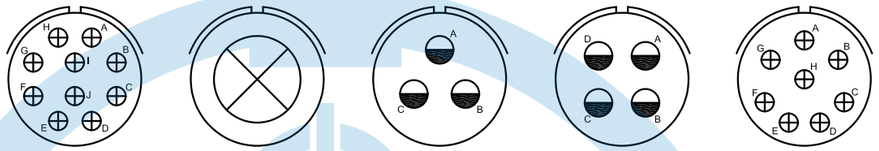

Insert Arrangement	20-01	20-2	20-3	20-4	20-7
Service Rating	A	D	D	D	A(ALL OTHERS) D(A,B,G,H)
Number of Contacts	10	1	3	4	8
Contact Size	16	0	12	12	16

Shell Size 20

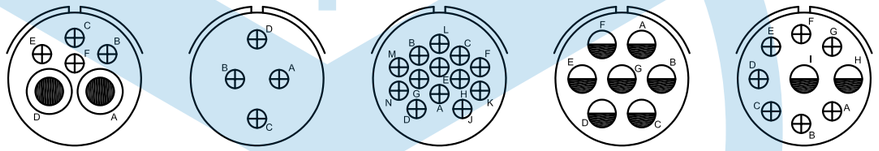

Insert Arrangement	20-8	20-10	20-11	20-15	20-16
Service Rating	INST	A	INST	A	A
Number of Contacts	4 2	4	13	7	7 2
Contact Size	16 8	16	16	12	16 12

Shell Size 20

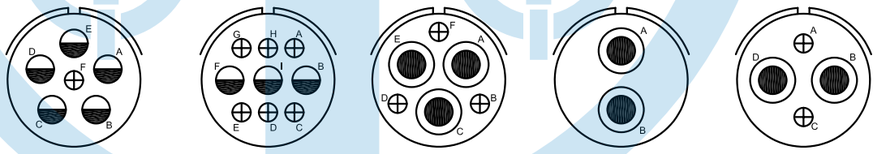

Insert Arrangement	20-17	20-18	20-22	20-23	20-24
Service Rating	A	A	A	A	A
Number of Contacts	1 5	6 3	3 3	2	2 2
Contact Size	16 12	16 12	16 8	8	16 8

Shell Size 20

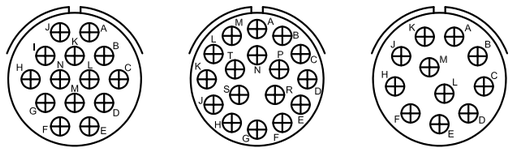

Insert Arrangement	20-27	20-29	20-33
Service Rating	A	A	A
Number of Contacts	14	17	11
Contact Size	16	16	16

Shell Size 22

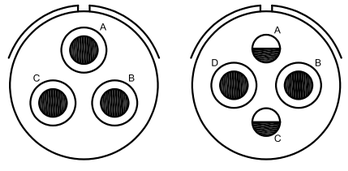

Insert Arrangement	22-2	22-4
Service Rating	D	A
Number of Contacts	3	2 2
Contact Size	8	12 8

1. View looking into front face of pin insert(+insulator).
2. Please make a direct inquiry for the information not contained in the table.

Contact Legend 0 4 8 12 16

MIL-C-22992 Style 접점 배열도 (Contact Arrangements)

Shell Size 22

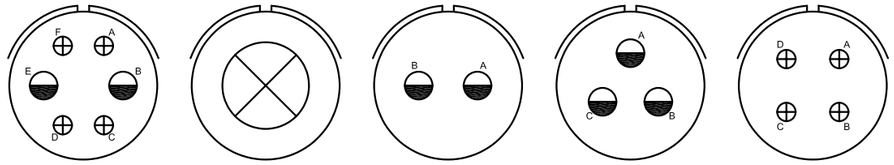

Insert Arrangement	22-5	22-7	22-8	22-9	22-10
Service Rating	D	E	E	E	E
Number of Contacts	4 2	1	2	3	4
Contact Size	16 12	0	12	12	16

Shell Size 22

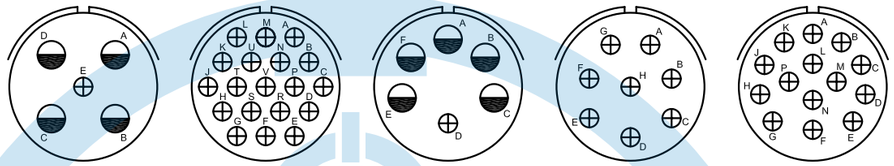

Insert Arrangement	22-13	22-14	22-15	22-18	22-19
Service Rating	A	A	A(ALL OTHERS) D(E)	A(C,D,E) D(ALL OTHERS)	A
Number of Contacts	1 4	19	1 5	8	14
Contact Size	16 12	16	16 12	16	16

Shell Size 22

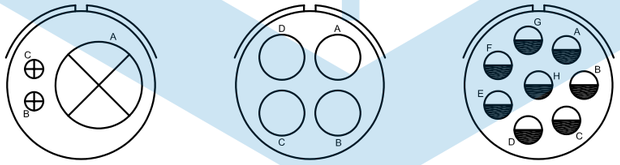

Insert Arrangement	22-21	22-22	22-23
Service Rating	A	A	A(ALL OTHERS), D(H)
Number of Contacts	2 2	4	8
Contact Size	16 0	8	12

Shell Size 24

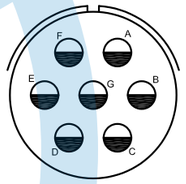

Insert Arrangement	24-2
Service Rating	D
Number of Contacts	7
Contact Size	12

Shell Size 24

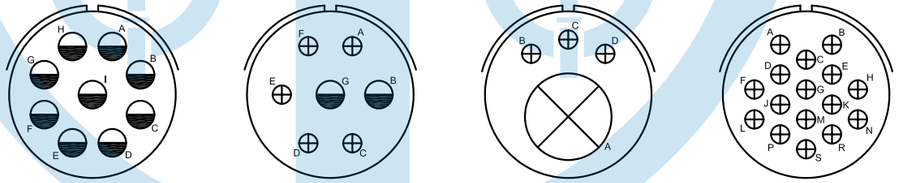

Insert Arrangement	24-02	24-3	24-4	24-5
Service Rating	A	D	D	A
Number of Contacts	9	5 2	3 1	16
Contact Size	12	16 12	16 0	16

Shell Size 24

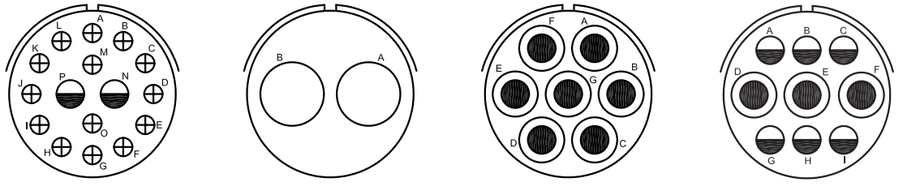

Insert Arrangement	24-7	24-9	24-10	24-11
Service Rating	A	A	A	A
Number of Contacts	14 2	2	7	6 3
Contact Size	16 12	4	8	16 8

1. View looking into front face of pin insert(+insulator).
2. Please make a direct inquiry for the information not contained in the table.

Contact Legend 0 4 8 12 16

MIL-C-22992 Style 접점 배열도 (Contact Arrangements)

Shell Size 24

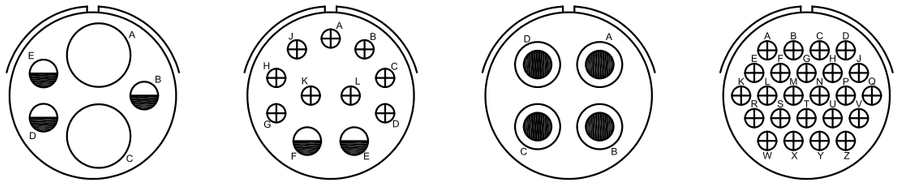

Insert Arrangement	24-12	24-20	24-22	24-28
Service Rating	A	D	D	INST
Number of Contacts	3 2	9 2	4	24
Contact Size	12 4	16 12	8	12

Shell Size 28

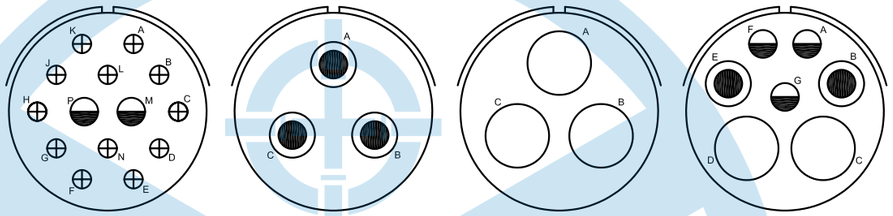

Insert Arrangement	28-2	28-3	28-6	28-10
Service Rating	D	E	D	A(ALL OTHERS), D(G)
Number of Contacts	12 2	3	3	3 2 2
Contact Size	16 12	8	4	12 8 4

Shell Size 28

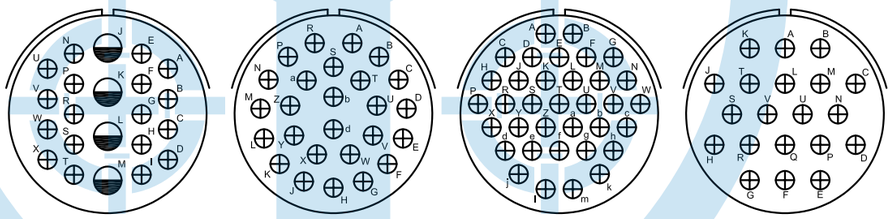

Insert Arrangement	28-11	28-12	28-15	28-16
Service Rating	A	A	A	A
Number of Contacts	18 4	26	35	20
Contact Size	16 12	16	16	16

Shell Size 28

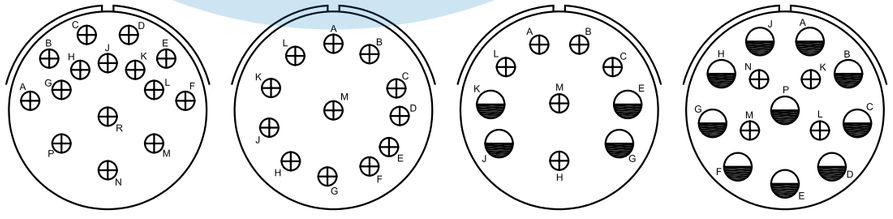

Insert Arrangement	28-17	28-18	28-19	28-20
Service Rating	A(ALL OTHERS) B(R), D(M,N,P)	A(A,B). C(M), INST(C,D,E,F) D(ALL OTHERS)	A(ALL OTHERS) B(H,M), D(A,B)	A
Number of Contacts	15	12	6 4	4 9
Contact Size	16	16	16 12	16 12

1. View looking into front face of pin insert(+insulator).
2. Please make a direct inquiry for the information not contained in the table.

Contact Legend 0 4 8 12 16

MIL-C-22992 Style 접점 배열도 (Contact Arrangements)

Shell Size 28

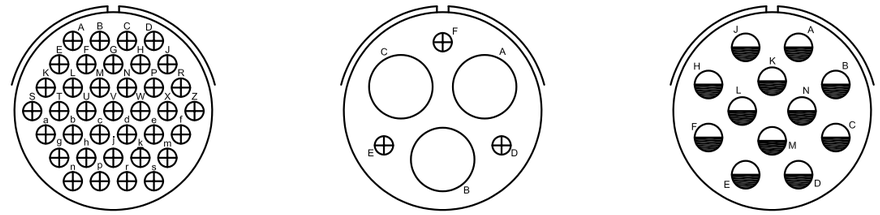

Insert Arrangement	28-21	28-22	28-51
Service Rating	A	D	A
Number of Contacts	37	3 3	12
Contact Size	16	16 4	12

Shell Size 32

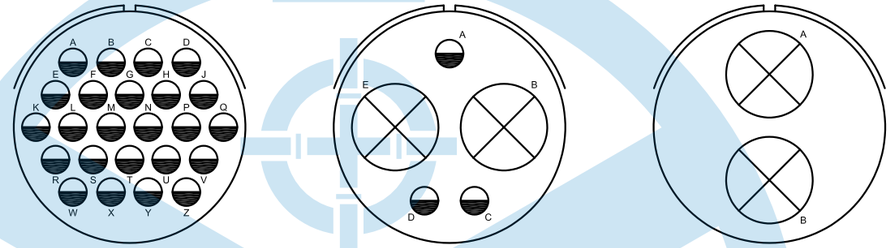

Insert Arrangement	32-01	32-1	32-5
Service Rating	A	E(A), D(ALL OTHERS)	D
Number of Contacts	24	3 2	2
Contact Size	12	12 0	0

Shell Size 32

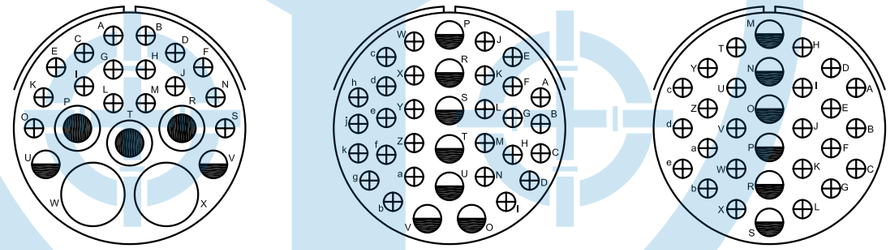

Insert Arrangement	32-6	32-7	32-8
Service Rating	A	A(ALL OTHERS), INST(A,B,h,j)	A
Number of Contacts	16 2 3 2	28 7	24 6
Contact Size	16 12 8 4	16 12	16 12

Shell Size 32

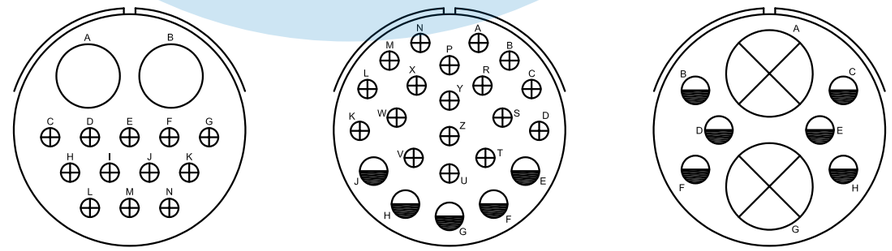

Insert Arrangement	32-9	32-13	32-15
Service Rating	D	D	D
Number of Contacts	12 2	18 5	6 2
Contact Size	16 4	16 12	12 0

1. View looking into front face of pin insert(+insulator).
2. Please make a direct inquiry for the information not contained in the table.

Contact Legend 0 4 8 12 16

MIL-C-22992 Style 접점 배열도 (Contact Arrangements)

Shell Size 32

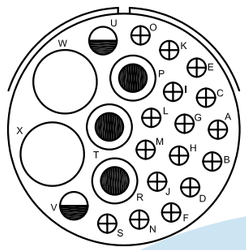

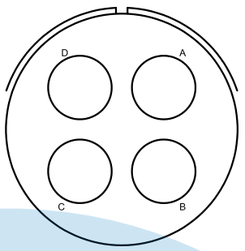

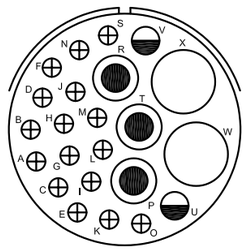

Insert Arrangement	32-16	32-17	32-20
Service Rating	A	D	1A
Number of Contacts	16 2 3 2	4	16 2 3 2
Contact Size	16 12 8 4	4	16 12 8 4

Shell Size 32

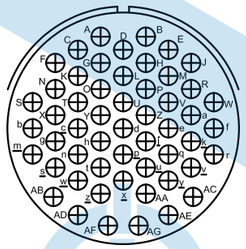

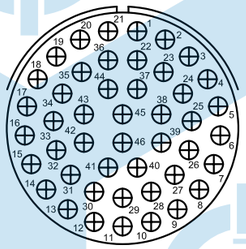

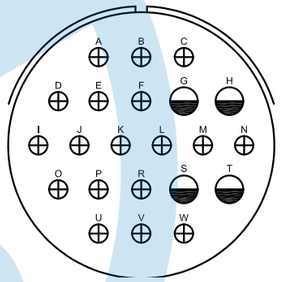

Insert Arrangement	32-22	32-73	36-1
Service Rating	A	A	D
Number of Contacts	54	46	18 2
Contact Size	16	16	16 12

Shell Size 36

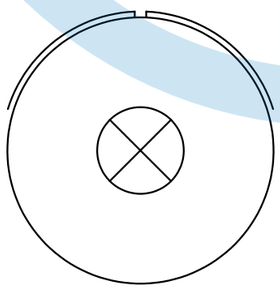

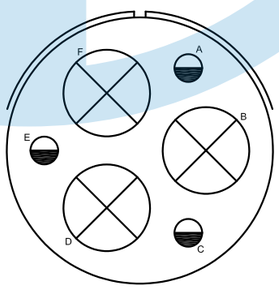

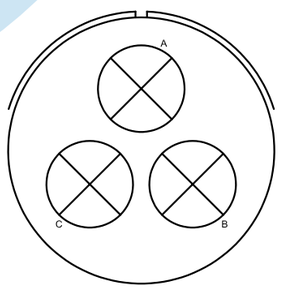

Insert Arrangement	36-03	36-3	36-4
Service Rating	A	D	A(B,C), D(A)
Number of Contacts	1	3 3	3
Contact Size	0	12 0	0

1. View looking into front face of pin insert(+insulator).
2. Please make a direct inquiry for the information not contained in the table.

Contact Legend: 0 4 8 12 16

MIL-C-22992 Style 접점 배열도 (Contact Arrangements)

Shell Size 36

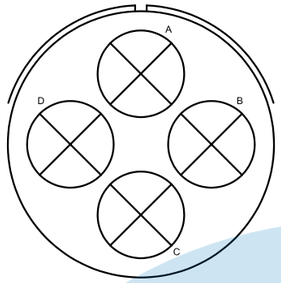

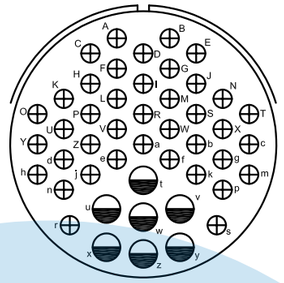

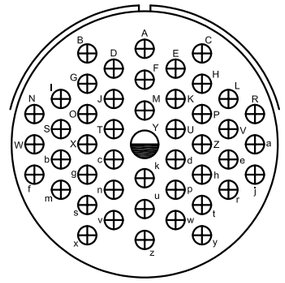

Insert Arrangement	36-5	36-7	36-8
Service Rating	A	A	A
Number of Contacts	4	40 7	46 1
Contact Size	0	16 12	16 12

Shell Size 36

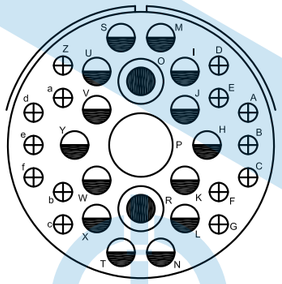

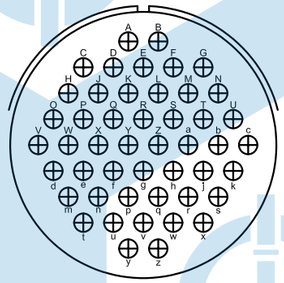

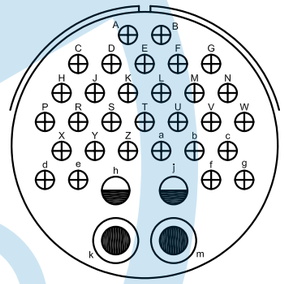

Insert Arrangement	36-9	36-10	36-20
Service Rating	A	A	A
Number of Contacts	14 14 2 1	48	30 2 2
Contact Size	16 12 8 4	16	16 12 8

Shell Size 36

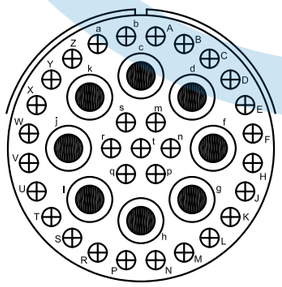

Insert Arrangement	36-54
Service Rating	A
Number of Contacts	31 8
Contact Size	16 8

1. View looking into front face of pin insert(+insulator).
2. Please make a direct inquiry for the information not contained in the table.

Contact Legend: 0 4 8 12 16

MIL-C-22992 Style 배열에 따른 접점구성 (Contact Arrangements & Formation)

Shell Size	Pin	Pin				
		20	16	12	8	4	0
12 Size							
12S-1	2		2				
12S-3	2		2				
12S-4	1		1				
12S-5	1			1			
12S-01	3		3				
12-5	1			1			
14 Size							
14S-1	3		3				
14S-2	4		4				
14S-3	1			1			
14S-4	1		1				
14S-5	5		5				
14S-6	6		6				
14S-7	3		3				
14S-9	2		2		1		
14-3	1						
16 Size							
16S-01	8		8				
16-9	4		2	2			
16-10	3			3			
16-11	2			2			
16-12	1					1	
16-13	2						
16S-1	7		7				
16S-4	2		2				
16S-5	3		3				
16S-8	5		5				
18 Size							
18-1	10	10					
18-2	3		3				
18-3	2			2			
18-4	4		4				
18-5	3		1	2			
18-8	8		7	1			
18-9	7		5	2			
18-10	4			4			
18-11	5		6	5			
18-12	6		6				
18-16	1			1			
18-18	7		5	2			
18-19	10		10				
18-20	5		5				
18-21	3			3			
18-01	8		8				
20 Size							
20-2	1						1
20-3	3			3			
20-4	4			4			1
20-7	8		8				
20-8	6		4		2		
20-10	4		4				
20-13	13		13				
20-15	7			7			
20-16	9		7	2			
20-17	6		1	5			

Shell Size	PIN	Pin				
		20	16	12	8	4	0
20-18	9		6	3			
20-19	3				3		
20-22	6		3		3		
20-23	2				2		
20-24	4		2		2		
20-27	14		14				
20-29	17		17				
20-01	10		10				
20-02	10		8	2			
20-03	3			1	2		
22 Size							
22-2	3				3		
22-4	4			2			
22-5	6		4	2			
22-7	1						1
22-8	2		2				
22-9	3		3				
22-10	4		4				
22-14	19		19				
22-15	6		1	5			
22-18	8		8				
22-19	14		14				
22-22	4				4		
22-23	8			8			
22-27	9		8		1		
22-01	12		8	4			
22-02	9			9			
24 Size							
24-2	7			7			
24-3	7		5	2			
24-4	4		3	3			
24-5	16		16				
24-7	16		14	2			
24-9	2					2	
24-10	7				7		
24-11	9			6	3		
24-12	5			3		2	
24-20	11		9	2			
24-22	4				4		
24-28	24		24				
24-01	2				2		
24-02	9			9			
24-03	12		12				
28 Size							
28-2	14		12	2			
28-3	3				3		
28-7	2					2	
28-9	7			3	2	2	
28-10	7			3	2	2	
28-11	22		18	4			
28-12	26		26				
28-15	35		35				
28-16	20		20				
28-17	15		15				
28-18	12		12				
28-19	10		6	4			

Shell Size	Pin	Pin				
		20	16	12	8	4	0
28-20	14		4	10			
28-21	37		37				
28-22	6		3			3	
28-51	12			12			
28-56	16		14	2			
32 Size							
32-1	5			3			2
32-5	2						2
32-6	23		16	2	3	2	
32-7	35		28	7			
32-8	30		24	6			
32-13	23		18	5			
32-15	8		6				2
32-16	23		16	2	3	2	
32-17	4					4	
32-22	54		54				
32-73	46		46				
32-01	24			24			
32-02	16			16			
32-03	3					3	
32-04	7			7			
32-05	28		18	8	2		
32-59	40		38	2			
36 Size							
36-1	22		18				
36-4	3						3
36-5	4						4
36-7	47		40				
36-8	47		46				
36-9	31		14	14	2	1	
36-10	48		48				
36-20	34		30	2	2		
36-02	27			27			
36-52	52		52				
40 Size							

본 표에 수록되지 않은 내용은 별도로 문의해 주십시요. (MIL-STD-1651에 따른다.)

MIL-C-22992 Style 절연체 회전위치(Alternate Insert Positions)

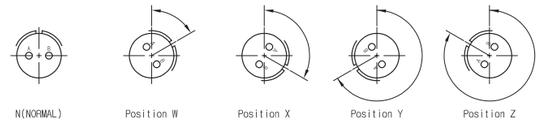

View looking into front face of pin insert or rear of socket insert.

Shell Size	Insert Arrangement	Service Rating	Total Contact	Contact Size					Alternate Positions			
				0	4	8	12	16	W	X	Y	Z
10SL	10SL-3	A	3					3	-	-	-	-
	10SL-4	A	2					2	-	-	-	-
12S	12S-3	A	2					2	70	145	215	290
	12S-4	D	1					1	-	-	-	-
12	12-5	D	1				1		-	-	-	-
14S	14S-1	A	3					3	-	-	-	-
	14S-2	Inst.	4					4	-	120	240	-
	14S-5	Inst.	5					5	-	110	-	-
	14S-6	Inst.	6					6	-	-	-	-
	14S-7	A	3					3	90	180	270	-
	14S-9	A	2					2	70	145	215	290
14	14-3	A	1			1			-	-	-	-
16S	16S-1	A	7					7	80	-	-	280
	16S-4	D	2					2	35	110	250	325
	16S-5	A	3					3	70	145	215	290
	16S-6	A	3					3	90	180	270	-
	16S-8	A	5					5	-	170	265	-
16	16-7	A	3			1		2	80	110	250	280
	16-9	A	4				2	2	35	110	250	325
	16-10	A	3				3		90	180	270	-
	16-11	A	2				2		35	110	250	325
	16-12	A	1		1				-	-	-	-
	16-13	A	2				2		35	110	250	325
18	18-1	A/ Inst.	10					10	70	145	215	290
	18-2	24V	3					3	-	-	-	-
	18-3	D	2				2		35	110	250	325
	18-4	D	4					4	35	110	250	325
	18-5	D	3				2	1	80	110	250	280
	18-8	A	8				1	7	70	-	-	290
	18-9	Inst.	7				2	5	80	110	250	280
	18-10	A	4				4		-	120	240	-
	18-11	A	5				5		-	170	265	-
	18-12	A	6					6	80	-	-	280
	18-13	A	4			1	3		80	110	250	280
	18-16	C	1				1		-	-	-	-
	18-18	Inst.	7				2	5	-	-	-	-
	18-19	A	10					10	-	120	240	-
	18-20	A	5					5	90	180	270	-
	18-21	A	3				3		-	-	-	-
	18-22	D	3					3	70	145	215	290
	18-29	A	5					5	90	180	270	-
	18-32	A	8					8	70	145	215	290
20	20-2	D	1						-	-	-	-
	20-3	D	3				3		70	145	215	290
	20-4	D	4				4		45	110	250	-
	20-6	D	3					3	70	145	215	290
	20-7	D /A	8					8	80	110	250	280
	20-8	Inst.	6			2		4	80	110	250	280
	20-10	A	4					4	-	-	-	-
	20-11	Inst.	13					13	-	-	-	-
	20-13	A	4					4	-	-	-	-
	20-14	A	5			2	3		80	110	250	280
	20-15	A	7				7		80	-	-	280
	20-16	A	9				2	7	80	110	250	280
	20-17	A	6				5	1	90	180	270	-
	20-18	A	9				3	6	35	110	250	325
	20-19	A	3			3			90	180	270	-
	20-21	A	9				1	8	35	110	250	325
	20-22	A	6			3		3	80	110	250	280
	20-23	A	2			2			35	110	250	325
	20-24	A	4			2		2	35	110	250	325
	20-27	A	14					14	35	110	250	325
	20-29	A	17					17	80	-	-	280
	20-33	A	11					11	-	-	-	-
22	22-1	D	2			2			35	110	250	325
	22-2	D	3			3			70	145	215	290
	22-4	A	4			2	2		35	110	250	325
	22-5	D	6				2	4	35	110	250	325
	22-7	E	1	1					-	-	-	-
	22-8	E	2				2		35	110	250	325
	22-9	E	3				3		70	145	215	290
	22-10	E	4					4	35	110	250	325
	22-11	B	2					2	35	110	250	325
	22-13	D/A	5				4	1	35	110	250	325
	22-14	A	19					19	80	110	250	280
	22-15	E/A	6				5	1	80	110	250	280
	22-18	D/A	8					8	80	110	250	280
	22-19	A	14					14	80	110	250	280
	22-20	A	9					9	35	110	250	325

Shell Size	Insert Arrangement	Service Rating	Total Contact	Contact Size					Alternate Positions			
				0	4	8	12	16	W	X	Y	Z
22	22-21	A	3	1				2	80	110	250	280
	22-22	A	4			4			-	110	250	-
	22-23	D/A	8				8		35	-	250	-
	22-27	D/A	9			1		8	80	-	250	280
	22-29	A	7				7		80	-	-	280
	22-33	D	5				3	2	80	110	250	280
24	24-2	D	7				7		80	-	-	280
	24-3	D	7				2	5	80	110	250	280
	24-4	D	4	1				3	80	110	250	280
	24-5	A	16					16	80	110	250	280
	24-6	D/A	8				8		80	110	250	280
	24-7	A	16				2	14	80	110	250	280
	24-9	A	2		2				35	110	250	325
	24-10	A	7			7			80	-	-	280
	24-11	A	9			3	6		35	110	250	325
	24-12	A	5		2		3		80	110	250	280
	24-20	D	11				2	9	80	110	250	280
	24-22	D	4			4			45	110	250	-
	24-27	E	7					7	80	-	-	280
	24-28	Inst.	24					24	80	110	250	280
28	28-1	D/A	9			3	6		80	110	250	280
	28-2	D	14				2	12	35	110	250	325
	28-3	E	3			3			70	145	215	290
	28-6	D	3		3				70	145	215	290
	28-7	D	2		2				35	110	250	325
	28-9	D	12				6	6	80	110	250	280
	28-10	D/A	7			2	2	3	80	110	250	280
	28-11	A	22				4	18	80	110	250	280
	28-12	A	26					26	90	180	270	-
	28-15	A	35					35	80	110	250	280
	28-16	A	20					20	80	110	250	280
	28-17	B/D/A	15					15	80	110	250	280
	28-18	C/D/A/Inst.	12					12	70	145	215	290
	28-19	B/D/A	10				4	6	80	110	250	280
	28-20	A	14				10	4	80	110	250	280
	28-21	A	37					37	80	110	250	280
	28-22	D	6		3			3	70	145	215	290
32	32-1	E/A	5	2			3		80	110	250	280
	32-3	D	9	1	2		2	4	80	110	250	280
	32-5	D	2	2					80	110	250	325
	32-6	A	23		2	3	2	16	80	110	250	280
	32-7	Inst./A	35				7	28	80	125	235	280
	32-8	A	30				6	24	80	125	235	280
	32-9	D	14		2			12	80	110	250	280
	32-13	D	23				5	18	80	110	250	280
	32-15	D	8	2			6		35	110	250	280
	32-17	D	4		4				45	110	250	-
	32-20	A	23		2	3	2	16	-	-	-	-
	32-22	A	54					54	80	110	250	280
	32-73	A	46					46	36	-	-	-
36	36-1	D	22				4	18	80	110	250	280
	36-3	D	6	3			3		70	145	215	290
	36-4	D/A	3	3					70	145	215	290
	36-5	A	4	4					-	120	240	-
	36-6	A	6	2	4				35	110	250	325
	36-7	A	47				7	40	80	110	250	280
	36-8	A	47				1	46	80	110	250	280
	36-9	A	31		1	2	14	14	80	125	235	280
	36-10	A	48					48	80	125	235	280
	36-15	D/A	35					35	60	125	245	305
	36-20	A	34				2	30	-	-	-	-

본 표에 수록되지 않은 내용은 별도로 문의해 주십시요. (MIL-STD-1651에 따른다.)

YGC SERIES
GAS SEALING CONNECTOR

YGC SERIES
GAS SEALING CONNECTOR

개요 (Overview)

SF6 Gas 또는 Helium Gas 등의 누출을 방지하고 신호 및 전원 연결을 할 목적으로 사용이 적합한 제품입니다.
적용: Gas 개폐기(Receptacle type, 장비 부착형)

This product is suitable for use with the purposes of preventing SF6 Gas or Helium Gas from leaking and of signalling and power connection.
Application: Gas switch (Receptacle type, equipment attachment type)

전기적 특성 및 기밀성 (Electrical Data and Pressure Seal)

Pressure seal	Below 1×10^{-7} cc/sec (SF6 Gas or Helium Gas, after being left for 12 hours at 3atm)
Insulation resistance	Above 5000MΩ at DC 500V
Withstanding voltage	Must endure over 2 seconds at AC 2000V
Usage temperature	-55℃ ~ +175℃

재질 및 보호피막 (Material and Protection Coating)

Body	Stainless Steel STS 303-B
Protection coating	Electroless nickel plating (over 1μ)
Contact	IRON-NICKEL ALLOY
Protection coating	Electroless nickel plating or gold plating

주문정보 및 부품번호 구성 (Ordering Information and Part Number Information)

YEON HAB NOMENCLATURE

YGC 00 - 18 - 10P - A

- YGC Series
- Shell Style
- Shell Size
- Contact Arrangement
- Contact Style

- **Shell size**
  18, 22, 24, 28, 32
- **Shell Style**
  00 - round connector, panel mounting hole is a through hole
  01 - round connector
  02 - round connector, panel mounting hole is a through hole, screw type coupling
  04 - Jam nut connector
- **Contact Style**
  A - two-way wires soldering type contact
  C - Pin type contact
  R - Pin type wires soldering type contact

원형 코넥터, 패널 장착형 (Round connector, Panel mounting type)

쉘 형상 "00"

패널 장착 홀은 관통구멍임.
전선은 납땜 연결사용.

Shell style "00"

Panel mounting hole is a through hole.
Wires are connected with soldering

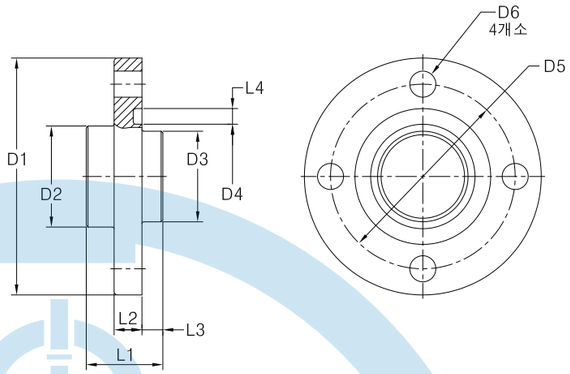

Shell size	D1	D2	D3	D4	D5 ±0.3	D6	L1	L2	L3	L4
18	68.0	29.0	26.0	30.0	53.0	9.0	22.0	8.0	6.0	4.5
22	85.0	35.0	32.0	37.0	70.0	10.0	22.0	8.0	6.0	4.5
32	100.0	49.0	49.0	55.0	85.0	9.0	22.0	8.0	6.0	5.9

접점배열 (Contact Arragement)

Shell Size 18

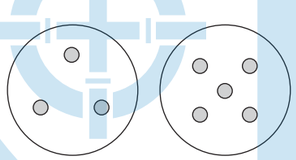

Contact Arrangement
No. of Contacts

18-3P
3-#16

18-5P
5-#16

Shell Size 22

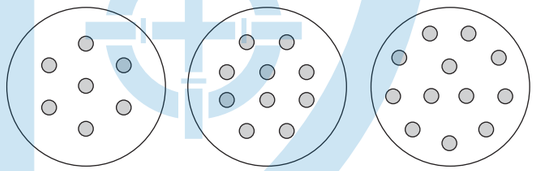

22-7P
7-#16

22-10P
10-#16

22-12P
12-#16

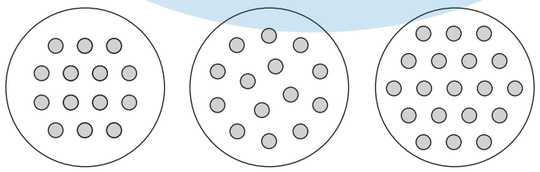

Contact Arrangement
No. of Contacts

22-14P
14-#16

22-14P
14-#16

22-19P
19-#16

Shell Size 32

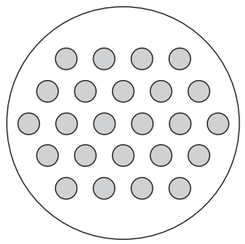

32-24P
24-#12

YGC Series GAS Sealing Connector

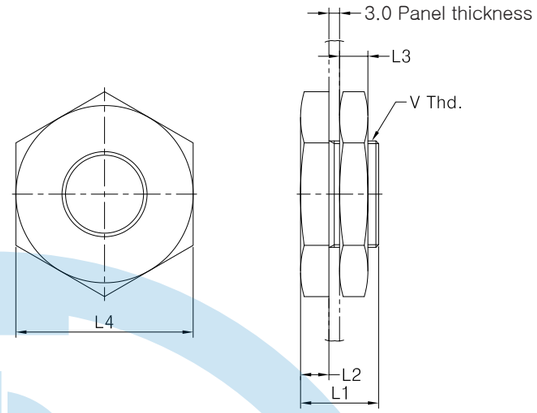

Shell size	L1	L2	L3	L4 ±0.2	V Thread.
18	22.0	8.0	8.0	50.0	M30x1.5

접점배열 (Contact Arragement)

Shell SIze 18

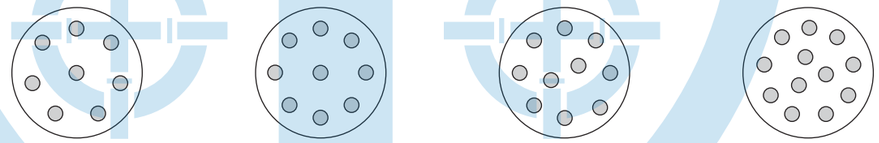

Contact Arrangement
No. of Contacts

18-8P
8-#16

18-9P
9-#16

18-10P
10-#16

18-12P
12-#16

원형 코넥터, 패널 장착형 (Round connector, Panel mounting type)

쉘 형상 "01"

잼너트 고정형 코넥터.

Shell style "01"

Jam nut fixed connector

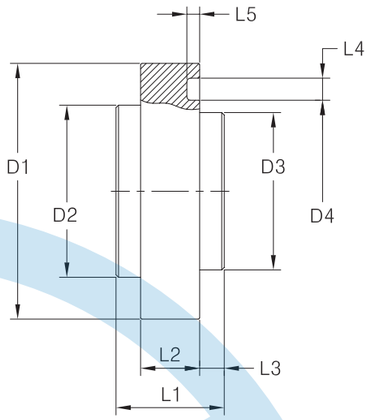

Shell size	D1	D2	D3	D4	L1	L2	L3	L4	L5
22	52.0	35.0	32.0	37.0	22.0	12.0	5.0	4.5	2.6

접점배열 (Contact Arragement)

Shell Size 22

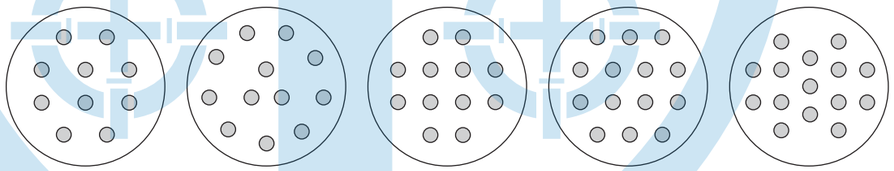

Contact Arrangement No. of Contacts	22-10P 10-#16	22-12P 12 -#16	22-12P 12-#16	22-14P 14-#16	22-15P 15-#16

원형 코넥터, 패널 장착형 (Round connector, Panel mounting type)

쉘 형상 "02"

원형 코넥터.
나사 결합식, 장착 홀은 구멍임.

Shell style "02"

Circular connector.
Screw type coupling.
Mounting hole is a through hole.

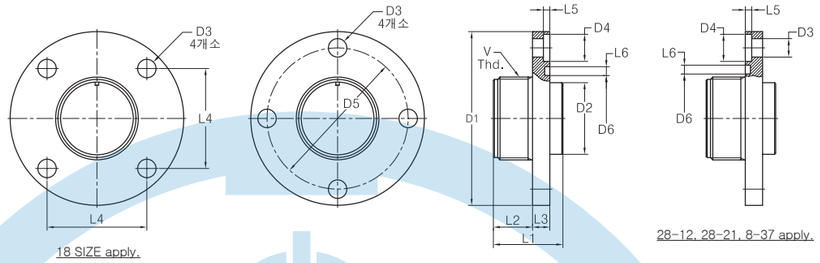

Shell size	D1	D2	D3	D4	D5	D6	L1	L2	L3	L4	L5	L6	V Thread. (Class : 2A)
18	49.0	25.0	4.5	-	-	-	32.0	19.0	4.5	28.0	-	-	1 1/8-18UNEF
22	74.0	30.0	8.5	12.5	58.0	33.5	32.0	18.0	8.0	-	3.0	4.1	1 3/8-18UNEF
24	80.0	33.0	8.5	12.5	65.0	39.5	32.0	18.0	8.0	-	3.0	4.1	1 1/2-18UNEF
28	87.0	42.0	8.5	12.5	73.0	50.0	34.0	22.5	8.0	-	3.0	4.1	1 3/4-18UNEF

접점배열 (Contact Arragement)

Shell Size 18 / Shell Size 22 / Shell Size 24

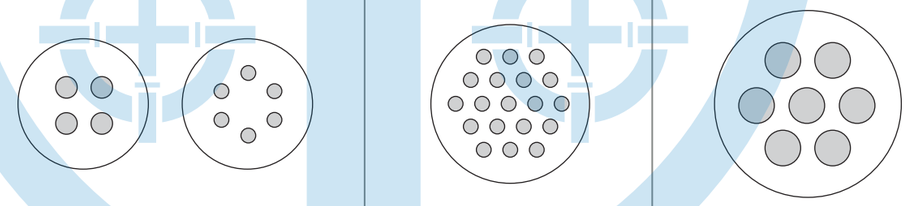

Contact Arrangement No. of Contacts	18-10 4-#12	18-12 6-#16	22-14 19-#16	24-7 7-#8

Shell Size 28

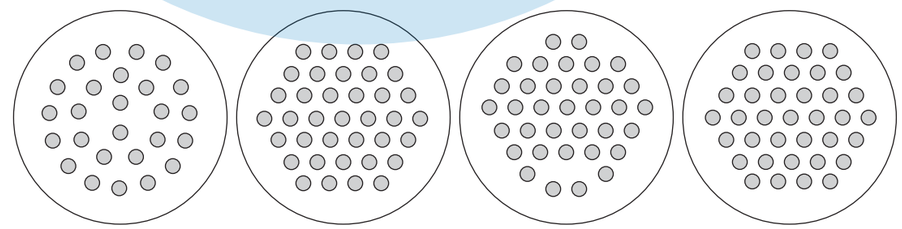

Contact Arrangement No. of Contacts	28-12 26-#16	28-21 37-#16	28-35 35-#16	28-37 37-#16

YGC Series GAS Sealing Connector (Contact)

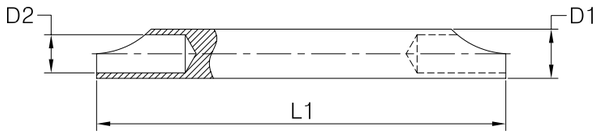

Contact Size	D1	D2	L1
16S	2.5	1.8	18.6
16	2.5	1.8	26.0
12	3.6	2.8	30.0

Contact, style “C”

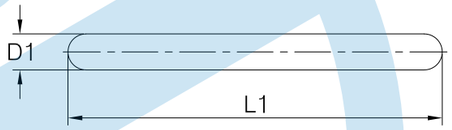

접점 크기	D1	L1
16	1.60	26.0
12	2.50	26.0

Contact, style “R”

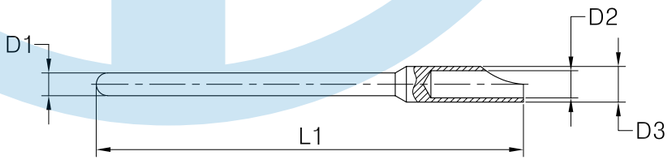

Contact Size	D1	D2	D3	L1
16	1.60	1.9	2.5	30.0
8	3.60	5.0	6.5	32.0

AUDIO CONNECTOR

AUDIO CONNECTOR

개요 (Overview)

5&6-Contact

These connectors are universally used in communications equipment where the highest reliability is needed under the most severe environmental conditions. The standard 5-contact connectors meet all requirements of MIL-C-55116, latest revision. 6-contact connectors as well as the light-weight versions are designed to meet all performance requirements of MIL-C-55116. Mating is accomplished quickly with a twist-lock motion. Non-rigid contacts are spring loaded and provide positive electrical connection with minimum voltage drop.

10-Contact

The 10-contact connectors conform to MIL-C-10544, latest revision. Construction and mating action are similar to the 5-contact line. Years of successful field experience have proven the remarkable reliability of this line of connectors for all types of all types of military and commercial communications equipment.

7-Contact Miniature Connector

These connectors are watertight and locked by means of a bayonet coupling. Hard gold plated spring contacts with self cleaning faces ensure a continuously low contact resistance.

5&6-Contact

Materials & Finish

Shells	Stainless steel, passivated, sand-blasted.
Panel Nuts	Stainless steel, passivated, sand-blasted.
Contacts	Copper alloy, .000030 gold per MIL-G-45204, Type I, Class 0 over
	.001 nicker per QQ-N-290, class I, grade C.
Insulators	Dially I phthalate per MIL-M-14F, Type MDG.

Specifications

Electrical	Dielectric Strength-500 V RMS.
	Insulation Resistance-1000 Megohms, Min.
	Contact Resistance (mated)-0.050 Ohms, Max.
Mechanical	Air Pressure-2.5 psi.
	Immersion-48 hrs. at 6ft.
	Durability-3000 cycles, mate and unmate.

10-Contact

Materials & Finish

Receptacle Shells	Stainless steel, passivated, sand-blasted.
Plug Shells	Stainless steel, black passivated.
Plug Rear Housing	Aluminum, black anodize.
Panel Nuts	Stainless steel, passivated, sand-blasted.
Contacts	Copper alloy, .000030 silver.
Insulators	Dially I phthalate per MIL-M-14F, Type MDG.

Specifications

Electrical	Dielectric Strength-500 V RMS.
	Insulation Resistance-1000 Megohms, Min.
	Contact Resistance (mated)- 0.015 Ohms, Max.
Mechanical	Air Pressure-2.5 psi.
	Immersion-48 hrs. at 6ft.
	Durability-1500 cycles, mate and unmate.

7-Contact Miniature Connector

Materials & Finish

Shells	Stainless steel, Black plate
Panel Nuts	Stainless steel, Black plate
Contacts	Copper alloy, 0.076㎛ gold per MIL-G-45204
Insulators	Dially I phthalate per MIL-M-14F, Type MDG

Specifications

Electrical	Dielectric Strength-500 V RMS.
	Insulation Resistance-1000 Megohms, Min.
	Contact Resistance(mated)-0.020 Ohms, Max
Mechanical	Durability-5000 cycles, mate and unmate.

5-Contact Standard per MIL-C-55116 Style

YH-183/U Receptacle

Spring loaded contact, solder terminals, mates with YH-229/U

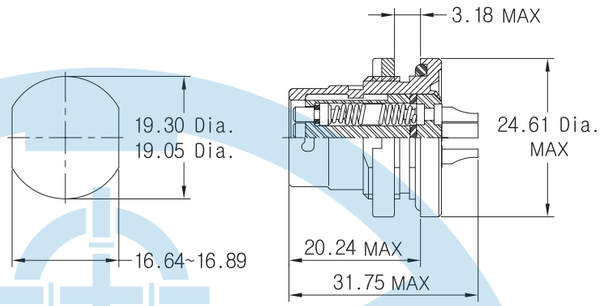

YH-228/U Plug

Spring loaded contact, barrel pin terminals*, mates with YH-229/U

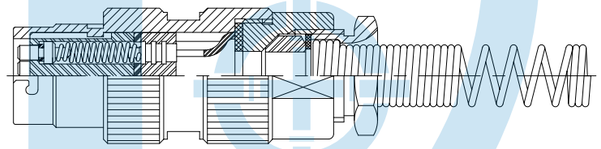

YH-229/U Plug

Rigid contact, barrel pin terminals*, mates with YH-183/U, YH-228/U

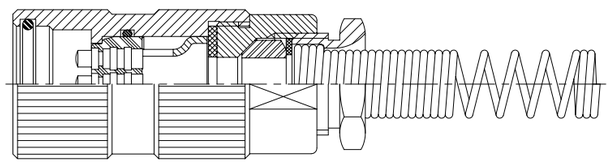

*Solder pin terminals also available.

6-Contact Standard per MIL-C-55116 Style

YH-283/U Receptacle

Spring loaded contact, solder terminals, mates with YH-329/U

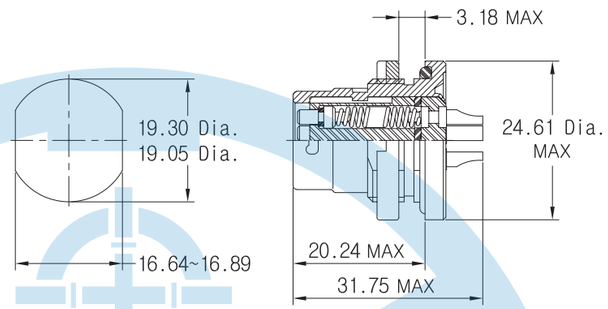

YH-328/U Plug

Spring loaded contact, barrel pin terminals*, mates with YH-329/U

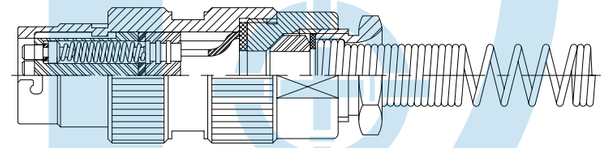

YH-329/U Plug

Rigid contact, barrel pin terminals*, mates with YH-283/U, YH-328/U

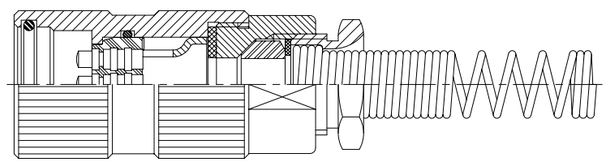

*Solder pin terminals also available.

10-Contact per MIL-C-10544 Style

YH-77/U Plug

Rigid contact, solder terminals, mates with YH-78/U & YH-79/U

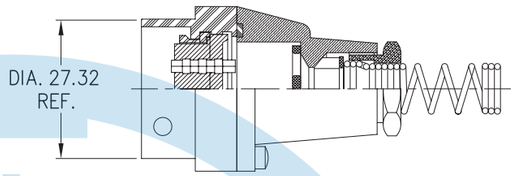

YH-78/U Plug

Non-rigid, Spring loaded contact, solder terminals, mates with YH-77/U & YH-161/U

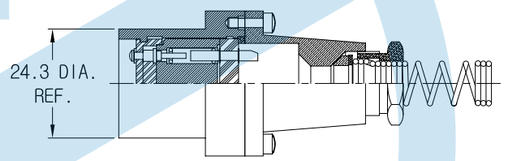

YH-161/U Plug

Rigid contact, taper pin terminals, mates with YH-78/U & YH-79/U

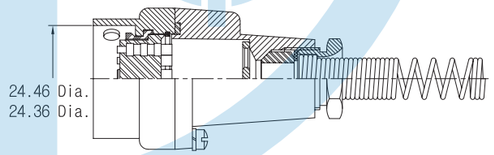

YH-79/U Receptacle

Non-rigid, Spring loaded contact, solder terminals, mates with YH-77/U & YH-161/U

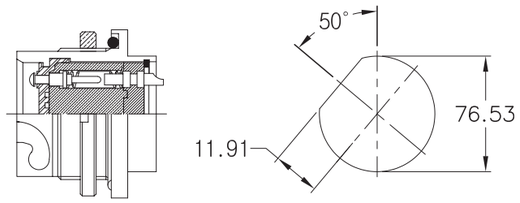

7-Contact Miniature Connector

YH 95351-C7(VG 95351-C7Style) Receptacle

Spring Contacts. mate with YH95351-A7

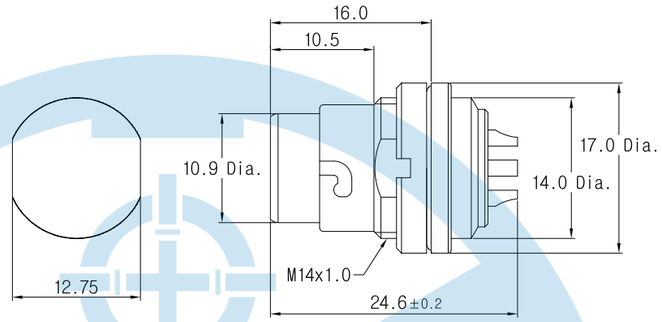

YH 95351-A7(VG 95351-A7Style) Plug

Rigid Contacts. mate with YH95351-C7

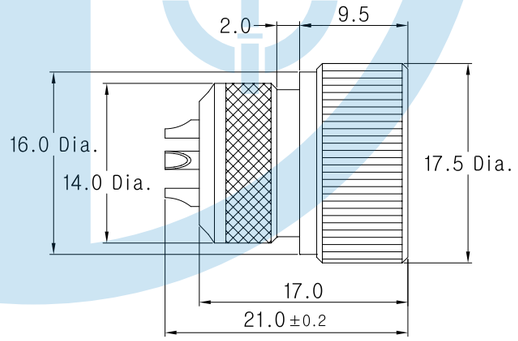

U-TYPE MULTIPURPOSE CONNECTOR

개요 (Overview)

The following U-type connectors are used in a great variety of millitary communications equipment and cable assemblies. Some specific applications are listed.

Designation	Typical Equip. Application	Military Spec. or Dwg. No.	Description
YH-288/U	AS1729	MIL-C-55243(EL)	Medium power plugs and receptacles. 12 #20 contact. YH-393/U are right angle versions of YH-290/U and YH-289/U, respectively.
YH-291/U	VRC-12		
YH-290/U	CX4742		
YH-289/U	CX4742		
YH-393/U	CX4742		
YH-316/U	OA-3633	MIL-C-55243(EL)	Medium power plugs and receptacles. 14#20 contact.
YH-317/U	PRC-25		
YH-318/U	PRC-77		

*U-Type nomenclature not yet assigned.

U-Type Multipurpose connector

The following are 12-contact medium power, quick disconnect connectors meeting all requirements of MIL-C-55243(EL) and they intermate.

YH-288/U Receptacle

Pin contacts. mates with YH-290/U

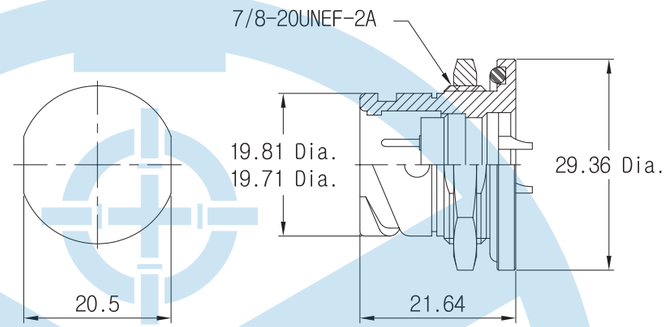

YH-290/U Plug

Socket contacts. mates with YH-288/U

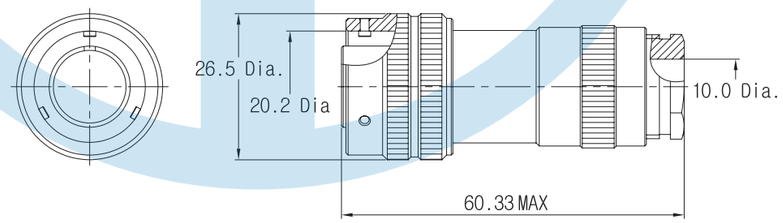

U-Type Multipurpose connector

The following are 12-contact medium power, quick disconnect connectors meeting all requirements of MIL-C-55243(EL) and they intermate.

YH-291/U Receptacle

Socket contacts. mates with YH-289/U, YH-393/U

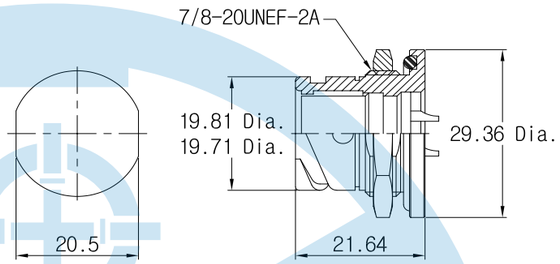

YH-289/U Plug

Pin contacts. mates with YH-291/U

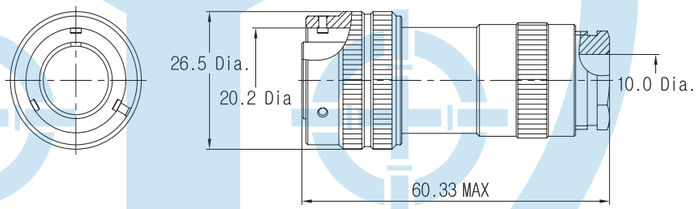

YH-393/U 90˚ Angle Plug

Pin contacts. mates with YH-291/U

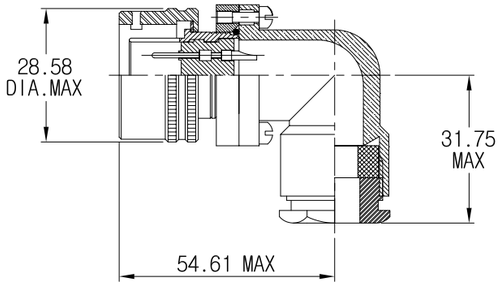

U-Type Multipurpose connector

The following are 14-contact medium power, quick disconnect connectors conforming to applicable requirements of MIL-C-55243(EL)

YH-318/U Receptacle

Socket contacts. mates with YH-316/U, YH-317/U

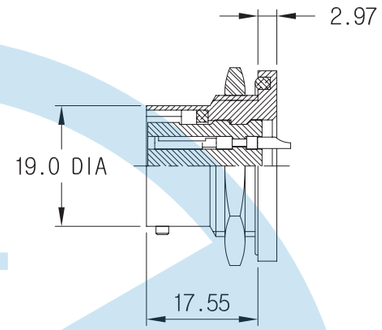

YH-316/U Plug

Pin contacts. mates with YH-318/U

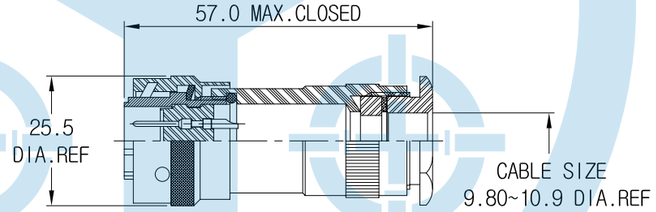

YH-317/U Shorting Plug

Pin contacts. mates with YH-318/U

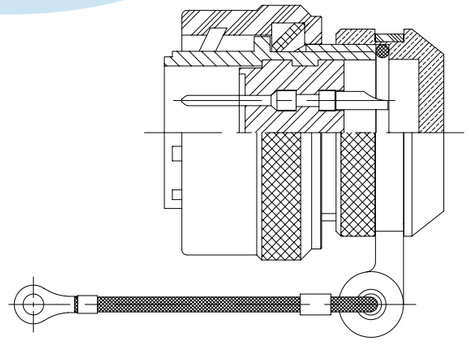

MW CONNECTOR
MIL-C-55181 Style

개요 (Overview)

Designed for intermediate power requirements, these rugged connectors are completely waterproof. Plug and receptacle connectors are available with 4, 9 or 18 molded-in conacts(size 12 and size 20) and are engineered with double lead jackscrews to facilitate mating and unmating.

Materials & Finish

Shells	Plugs	Aluminum alloy, cadmium plate with olive drab chromate per MIL-F-14072C
	Receptacles	Brass, cadmium plate with olive drab chromate per MIL-F-14072C
	Nosepieces	Alloy steel, cadmium plate with olive drab chromate per MIL-F-14072C
Contacts	Socket	High conductivity copper alloy with beryllium copper spring element, gold plated per MIL-G-45204
	Pin	Copper alloys, gold plated per MIL-G-45204
Insulators		Neoprene and/or glass filled dially l phthalate, Type SDG-F per MIL-M-14F
Drawscrews		Stainless steel, passivated

Specifications

Electrical	Dielectric Strength	4 contact	2000V RMS.
		9, 18 contact	1500 V RMS.
	Insulation Resistance	1000 Megohms min. at 500 V DC.	
	Contact Resistance	4 contact	20 mV at 35A.
		9,18 contact	25 mV at 7.5A.
Mechanical	Air Pressure	-	2.5 psi.
	Water Immersion	-	6ft., 48 hours.
	Durability	-	500 cycles with a coupling torque of 12 in.-lbs
	Contact Retention	-	10 lbs.
	Insert Strength	-	400 lbs.(Axial force)

MW Connector MIL-C-55181 Style

Substitue cable clamp code for"XX"as required.

Cable Diameter(inches)	Cable Clamp Code
.292 to .343	11
.323 to .406	13
.386 to .458	15
.448 to .531	17
.511 to .593	19

MIL–C–55181 Designation	Manufacturer's Designation
M55181/1-01	MW10F(M)A11
M55181/1-02	MW10F(M)A13
M55181/1-03	MW10F(M)A17
M55181/1-04	MW10F(M)A19
M55181/1-05	MW10F(M)A15
M55181/2-01	MW20M(M)A00
M55181/3-01	MW10M(M)A11
M55181/3-02	MW10M(M)A13
M55181/3-03	MW10M(M)A17
M55181/3-04	MW10M(M)A19
M55181/3-05	MW10M(M)A15
M55181/4-01	MW20F(M)A00
M55181/5-01	MW10M(M)B11
M55181/5-02	MW10M(M)B13
M55181/5-03	MW10M(M)B17
M55181/5-04	MW10M(M)B19
M55181/6-01	MW20F(M)B00
M55181/7-01	MW10M(M)D11
M55181/7-02	MW10M(M)D13
M55181/7-03	MW10M(M)D17
M55181/7-04	MW10M(M)D19
M55181/7-05	MW10M(M)D15
M55181/8-01	MW20F(M)D00

MW 10 Plug

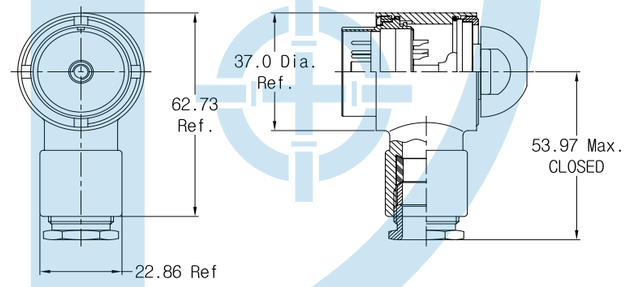

MW 20 Receptacle

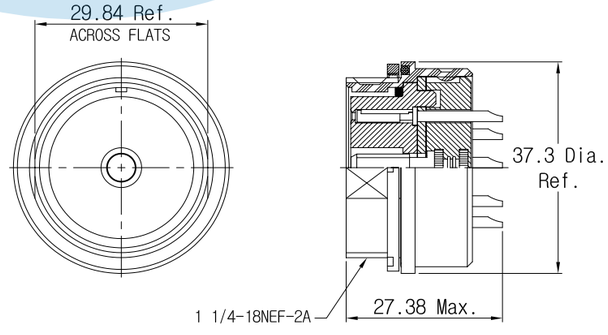

AUDIO FILTERED CONNECTOR
MIL-C-55116 Style

개요 (Overview)

Integrally filtered connectors for controlling electromagnetic interference(EMI) are available in various connectors such as the 5 and 6-contact audio receptacles, YH-183/U and YH-283/U, per MIL-C-55116. The filters used are low-pass, pi-network, ferrite-ceramic capacitors. Each filter surrounds the pin to be filtered and is connected to a ground-plane built into the connector.

5&6-Contact Materials & Finish, Specifications

Shells	Stainless steel, passivated, sand blasted.
Panel Nuts	Stainless steel, passivated, sand blasted.
Contacts	Copper alloy, .000050 gold per MIL-G-45204, Type II, Class 1 over .00010 nickel.
Insulators	Dially l phthalate per MIL-M-14F, Type MDG.
Electrical	Dielectric Strength-500 VDC.
	Insulation Resistance-1,000 MΩ, Min.
	Contact Resistance (Mated)-0.050 Ohms, Max.
Mechanical	Air Pressure-2.5 psi
	Durability-1500 cycles, mate and unmate.

Audio Filtered Connector MIL-C-55116 Type Style

YH183L-1 (5 Contacts)

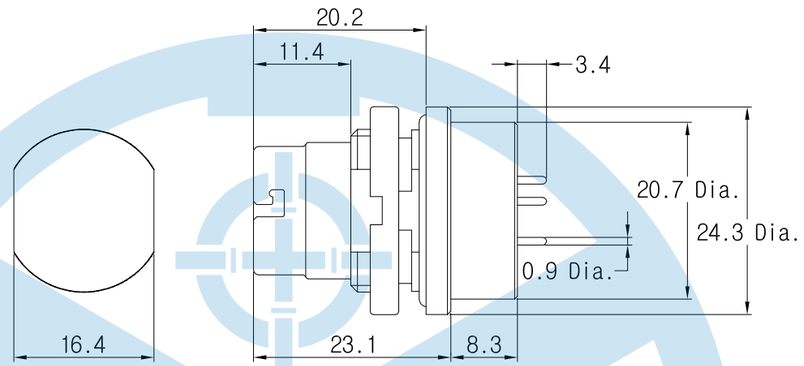

YH283L-1 (6 Contacts)

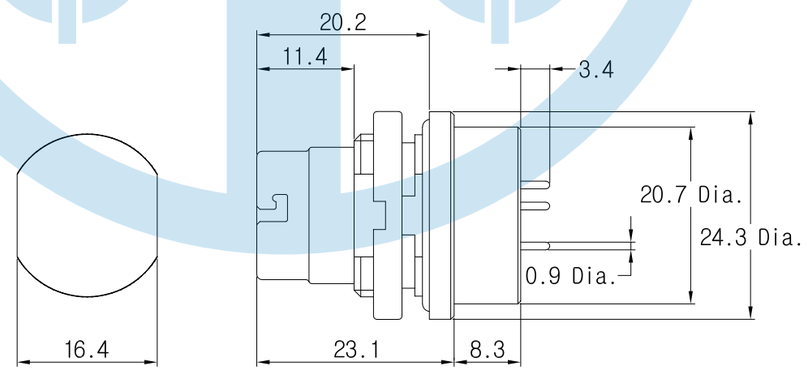

Connector for Electric Vehicle

Ordering Information

EV02 H - 01 P N

- Shell Style
- Class
- Contact Number
- Contact Style
- Polarizing Position

• **Shell Style**
EV02 - Wall mounting Receptacle
EV06 - Straight Plug

전기적 특성

절연저항	DC 500V를 1분간 인가 시 100MΩ 이상일 것.
내전압	AC 2000V를 1분간 인가 시 절연파괴 없을 것.
정격전압	DC 400V
정격전류	300A
최대전류	400A

Electrical Characteristic

Insulation resistance	Not less than 100MΩ with application DC500V for 1 Min.
Dielectric Withstanding Voltage	No damage with AC 2000V for 1 Min.
Rated Voltage	DC 400V
Rated Current	300A
Maximum current	400 A
EMI Shielding effect	Conformity

환경 특성

방수기능	수심 100mm 12시간
내유성 (엔진오일)	40℃ 12시간 유지
난연성	5초 인가 후 자연소화 될 것
진동	10G, 10~500㎐ S.T: 15분, 불연속성 10㎲이하
낙하충격	900mm, 3회

Environmental Characteristic

Waterproof	12hour in 100mm
Fluid Immersion (Engine oil)	Conformity
Flammability	Conformity (Self-extinguishing after 5 second)
Vibration	10G, 10~500㎐ , S.T: 15 Min, discontinuity below than 10㎲ .
Drop	height- 900mm, 3 times

Material and Colour

Colour	Orange
Shell	PBT(GLASS 15%, Resistance to Flame)

Connector for Electric Vehicle

Connector, Plug, Straight Electrical

EV06 : Straight Plug

· W KEY와 결합되지않게 2개의 KEY각도 및 크기를
다르게 하여 원천적인 오결합 방지.
· 커넥터 앞부위에 오링, 후부위는 패킹이 있어 방수기능 우수.
· 접지용 핑거 및 케이블에 편조가 있어 EMI 쉴드 기능 우수.
· 잠금장치가 있어 자연적인 연결된 커넥터의 분리현상 없음.

· Preventative function from incorrect connection; different alternate insert positions and size to avoid connecting with W-KEY.
· Good waterproof Function as O-ring and grommet is assembled in front side and rear side of connector.
· Good EMI shield effect; Grounding finger and cable braid are installed.
· No separation from loose; Special Lock-device is equipped.

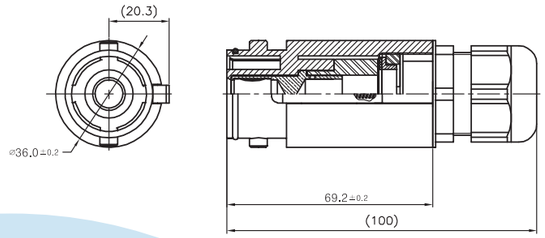

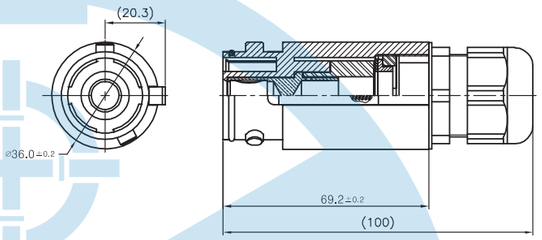

Connector, Receptacle, Wall mounting, Electrical

EV02 : Wall mounting Receptacle

· W KEY와 결합되지않게 2개의 KEY각도 및 크기를
다르게 하여 원천적인 오결합 방지.
· 접지용 핑거가 있어 EMI 쉴드 기능 우수.
· 커넥터 후부위에 오링이 있어 방수기능 우수.
· 접점 앞부위에 절연캡이 있어 감전사고 예방기능.

· Preventative function from incorrect connection; different alternate insert positions and size to avoid connecting with W-KEY.
· Good EMI shield; Grounding finger.
· Good waterproof; O-ring is assembled on rear side of connector.
· Preventative function from electronic shock; insulating cap assembled in front of contacts.

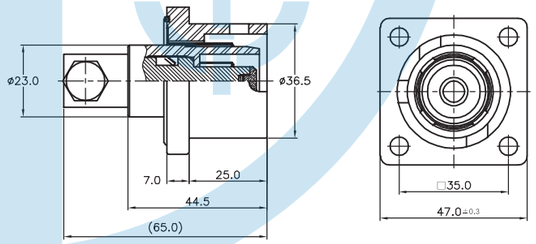

연합정밀주식회사
YEONHAB PRECISION CO., LTD.

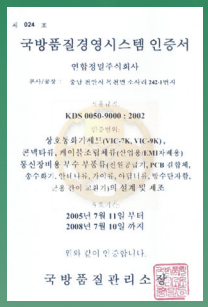

국방품질경영시스템(국방)

AS 9100(항공)

ISO 14001(환경)

ISO 9001(품질)

본사 (Head Office & Factory)	충남 천안시 동남구 목천읍 소사리 242–1 TEL: 041-620-3100 FAX: 041-566-5997	#242-1, Sosa-Ri, Mockcheon-Eup, Dongnam-Gu, Cheonan City, Chungcheongnam-Do, Korea (ZIP CODE: 330-844) TEL: +82-(0)41-620-3100 FAX: +82-(0)41-566-5997
국내 사업부 (Sales Department)	TEL: 041-620-1310~9 FAX: 041-620-1320	TEL: +82-(0)41-620-1310~9 FAX: +82-(0)41-620-1320
해외 사업부 (Int'l Business Dept)	TEL: 041-620-3230~5 FAX: 041-620-1320	TEL: +82-(0)41-620-3230~5 FAX: +82-(0)41-620-1320
제2공장 (2nd Factory)	충남 연기군 전동면 청송리 167–4 TEL: 041-863-8401 FAX: 041-863-8104	#167-4, Cheongsong-Ri, Jeondong-Myun, Yeonki-Kun, Chungcheongnam-Do, Korea (ZIP CODE: 339-842) TEL: +82-(0)41-863-8401 FAX: +82-(0)41-863-8104
서울 사무소 (Seoul Office)	서울시 구로구 구로동 212–30 에이스트윈타워 2차 809호 **TEL: 02-2109-8991 FAX: 02-2109-8996**	**809 AceTwin Tower 2, #212-30 Guro-Dong Guro-Gu, Seoul City, Korea (ZIP CODE: 152-050) TEL: +82-(0)2-2109-8991 FAX : +82-(0)2-2109-8996**

Rev No. 1